TYVOK

Spider S1

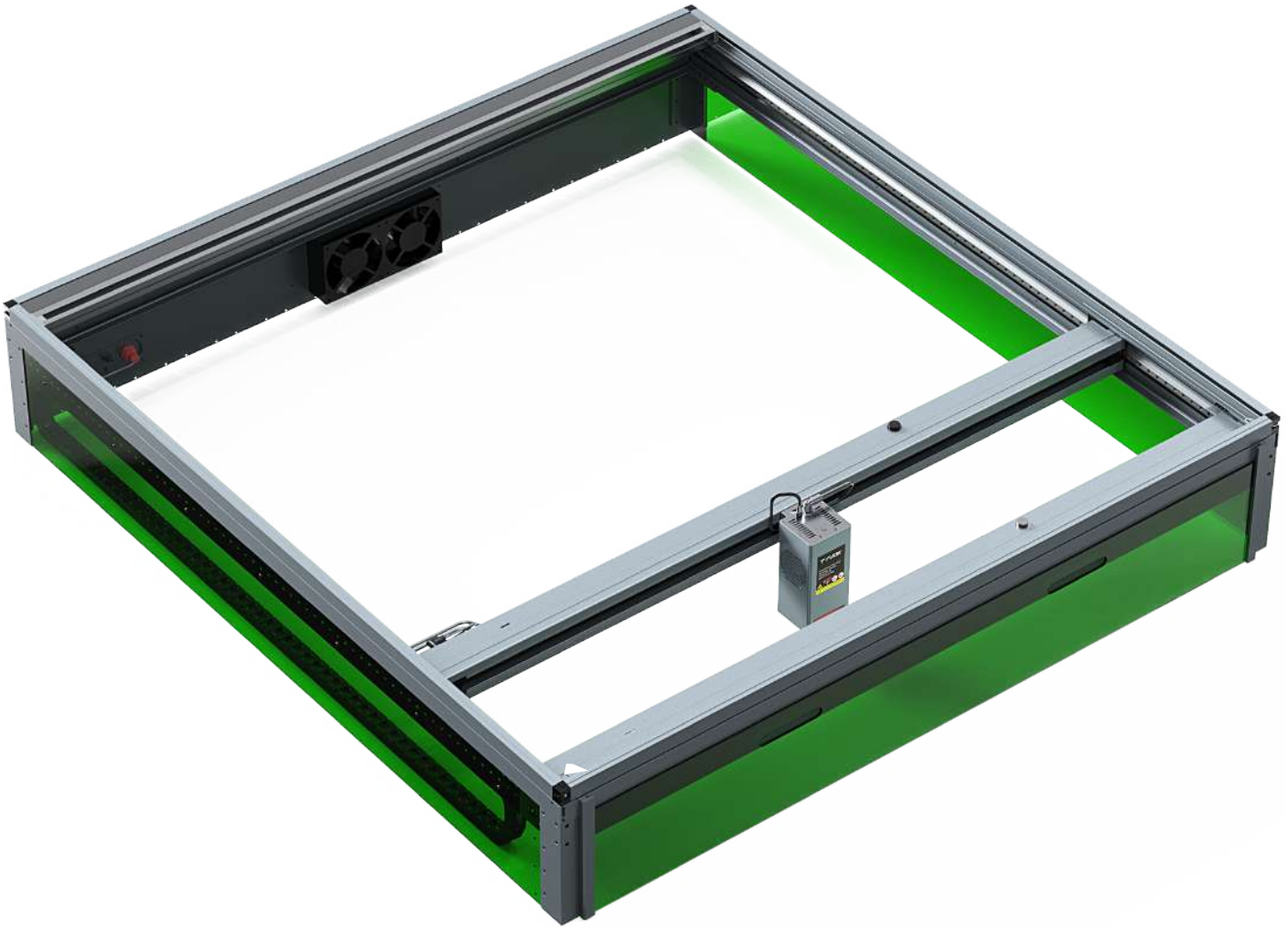

USER MANUAL

Wiki JS

Youtube

Join in Spider S1 FB Group

Company: Shenzhen Tyvok Technology Co., Ltd.

Address: Room 206, Building 7, Mengliyuan Industrial Park, Yousong Road, Longhua District, Shenzhen, PRC.

Website: www.tyvok.com

Email: cs@tyvok.com

A Letter to Customers

Dear customers,

Thank you for choosing Spider S1. To ensure your convenience, please carefully read this Manual before operating the machine and strictly follow the instructions provided. The Spider S1 team is always ready to provide you with high-quality service. If you encounter any issues during use, please contact us via the email provided at the end of this Manual. To enhance your experience with our product, you can also access operational knowledge through the following methods:

User Manual on TF Card:

Relevant user instructions and videos can be found on the TF card.

Visit Spider S1 Official Website:

www.tyvok.com for information on software, hardware, contact details, device operation, and maintenance.

Best regards,

Tyvok Team

Guidelines for Safe Operation

The laser engraving machine utilizes a high-density laser beam to engrave or cut materials, generating high temperatures on the material's surface to vaporize it without combustion. However, most materials are inherently flammable and may ignite, resulting in an open flame that could damage the machine and its surroundings.

Please adhere to the following operating principles:

1. Avoid placing this product near flammable, explosive substances, volatile solvents, or high heat sources. Keep it in a well-ventilated, cool, and low-dust environment. .

2. Use only the power cord provided with this product during installation: do not substitute with other power cords.

3. Regularly clean the machine body and laser module with a dry cloth when the power is disconnected.

4. The operating temperature for the laser is between 0°C-35°C: refrain from using it in below-zero temperatures or humid environments, and never operate it during thunderstorms.

5. If not using the product for an extended period, turn it off and disconnect the power cord.

6. When the product is powered on, do not touch the electronic components or related areas with hands or other tools.

7. Avoid touching the moving mechanical parts and laser module while the product is in operation.

8. Before engraving, place a non-penetrable flat object such as aluminum alloy or stainless steel on the work surface and then position the material to be processed.

9. Always wear protective goggles during laser engraving to avoid eye injuries caused by direct exposure to the laser beam.

10. During the engraving process, slight smoke or odor may occur: operate in a well-ventilated area.

11. Children under the age of 10 should not use this product without adult supervision to prevent injuries.

12. Prepare a fire extinguisher as a precautionary measure and conduct regular maintenance and inspections. The machine should not run without supervision.

13. Users must comply with the laws and regulations of the country or region where the equipment is located or used, adhere to professional ethics, and fulfill safety responsibilities. The use of our products or equipment for any illegal purposes is strictly prohibited, and our company assumes no responsibility for any legal liabilities resulting from violations. Please read and strictly adhere to these guidelines for safe and responsible use of the laser engraving machine.

C O N T E N T S

01

UNBOX AND CHECK

1.1 Packing List

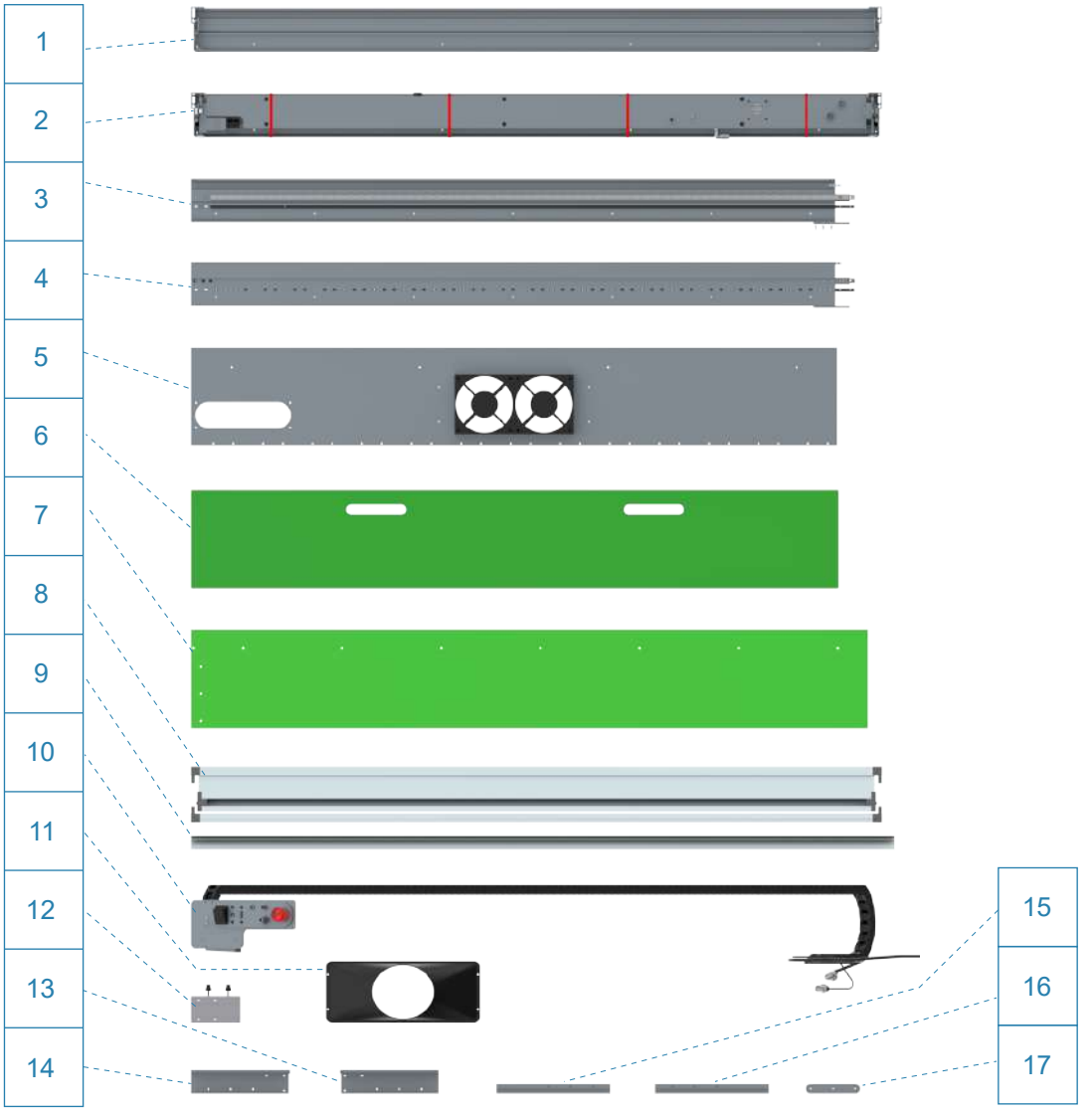

Serial Number	Name	Quantities
1	Rear Beam	1 pcs
2	Front Beam	1 pcs
3	X-axis A	1 pcs
4	X-axis C	1 pcs
5	Rear board	1 pcs
6	Front board	1 pcs
7	X-axis board A	2 pcs
8	Cover Beam	2 pcs
9	Cover Long Bracket	2 pcs

Serial Number	Name	Quantities
10	Drag-chain Components	1 pcs
11	Air Exhaust Plate	1 pcs
12	Laser Module Back Plate	1 pcs
13	Leg B	2 pcs
14	Leg A	2 pcs
15	Slot Plate A	1 pcs
16	Slot Plate B	1 pcs
17	Fixing Block	5 pcs

1.2 Accessoies in Box

20/40/60W Laser Head

Mini Fire Extinguisher x 2

Power Adapter & Cable

USB Cable

Card Reader

TF Card

WiFi Antenna

Goggles

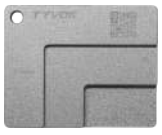

Laser Focus Block*1

Tool Kit (4 wrenches, cleaning cloth, cleaning brush, screwdriver)

Double Sided Tape

1.3 Add-ons

Air Assist Pro II (50L)

Touch Screen

2W Laser Head

Rotary Pro 2

Smoke Filter

Drawing Module

CNC

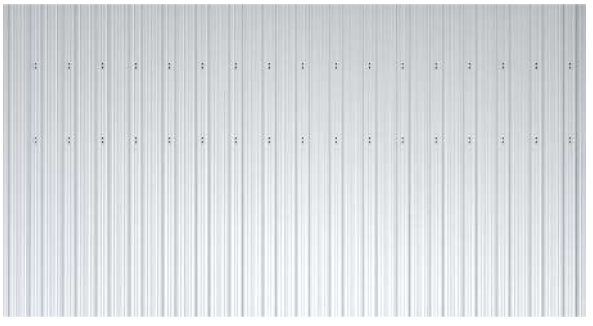

Honeycomb Working Plate
(1365*2600mm)

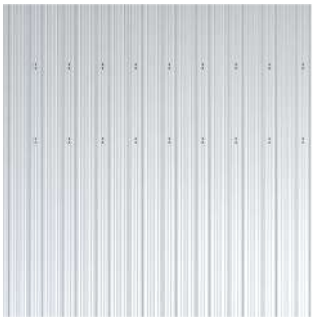

Honeycomb Working Plate
(1365*1300mm)

1.4 Screws List

Screw Specification

Part Number	Specification	Name	Quantity/pcs	Reference
Screw package 1	M2*5*6	Cup Head Hexagon Socket Screw	24	
Screw package 2	M3*6		12	
Screw package 3	M3*10		14	
Screw package 4	M3*6	Countersunk Hexagon Socket Screw	27	
Screw package 5	M3*12		39	
Screw package 6	M4*6		2	
Screw package 7	M2.5*6	Countersunk Cross-Head Screw	12	
Screw package 8	M3*6	Mushroom Head Hexagon Socket Screw	56	

02

ASSEMBLE SPIDER S1

2.1 X-axis Frame Assembly

2.1.1 X-axis Frame Assembly

1. Please insert X-axis A and C as below.

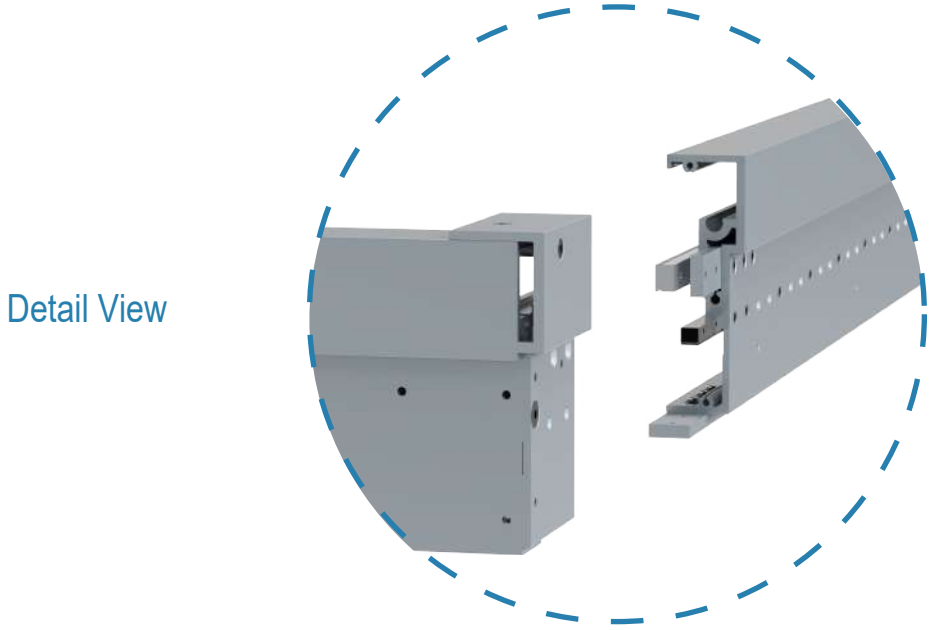

2. Screws Installation.

tips The symmetrical and quantity of screws used in symmetrical positions are the same.

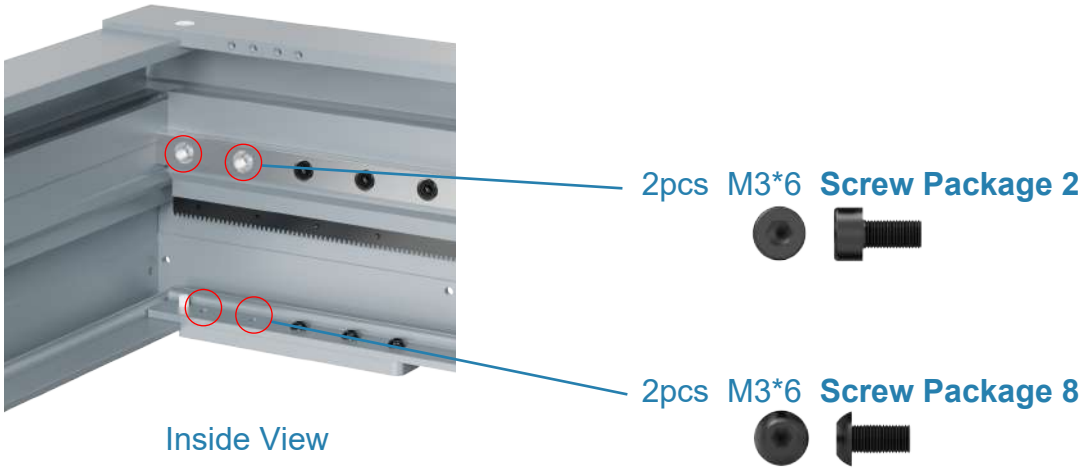

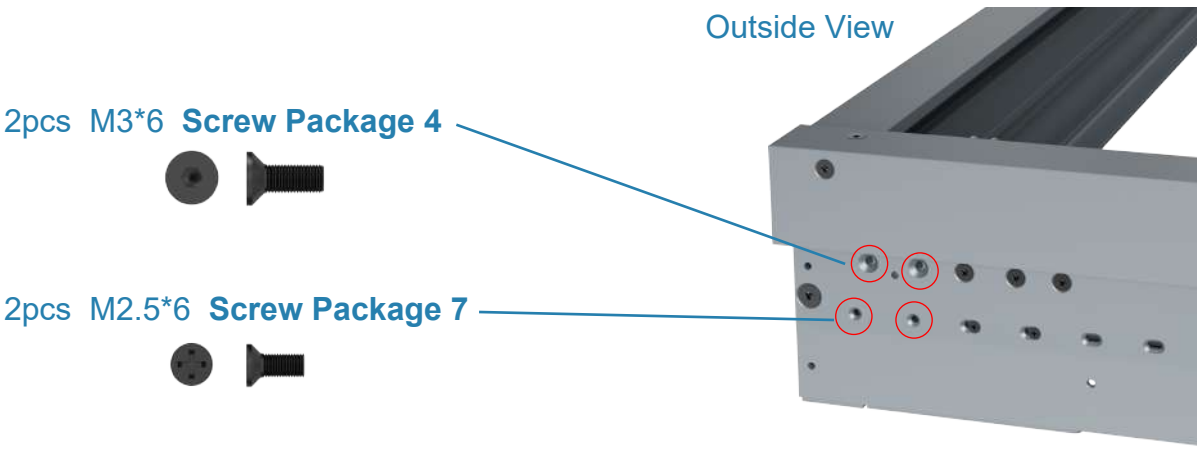

2.1.2 Install Rear Protection Panel

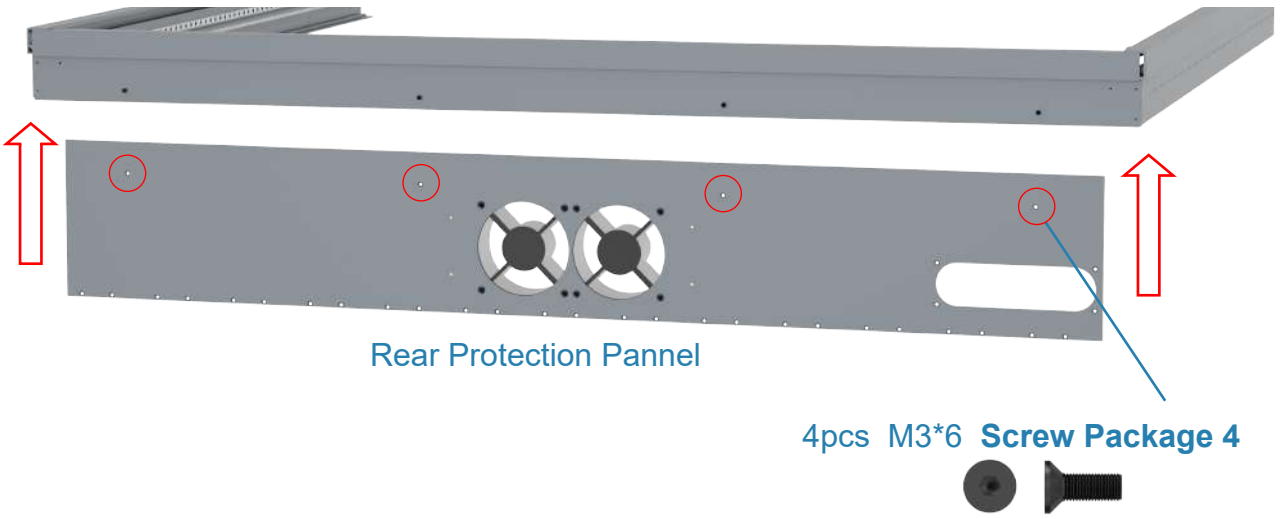

2.1.3 Install Rear Legs

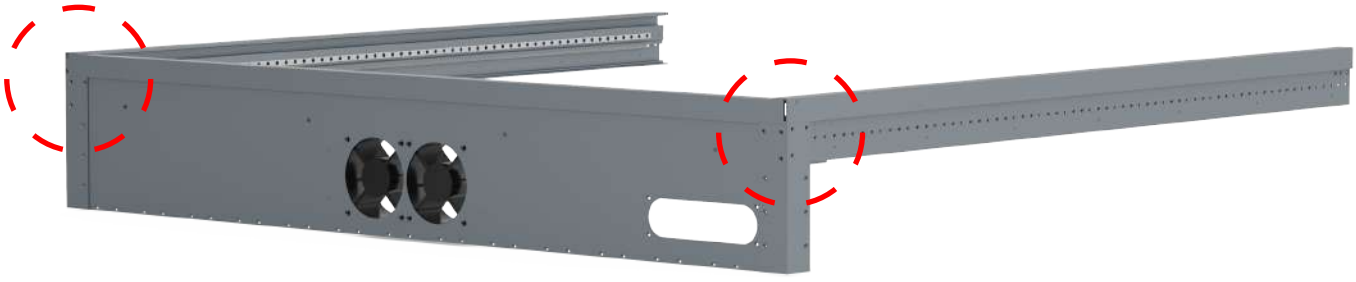

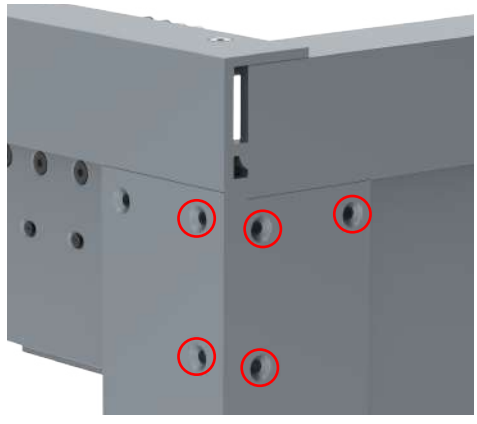

Detail View

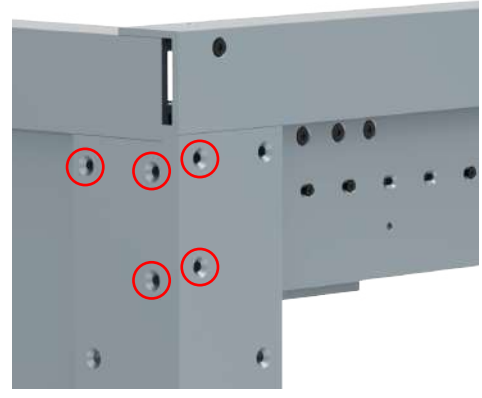

Detail View

2.1.4 Install Front Legs

Warning: The cable tie can't be removed at this time. Or else you will fail to install the Machine.

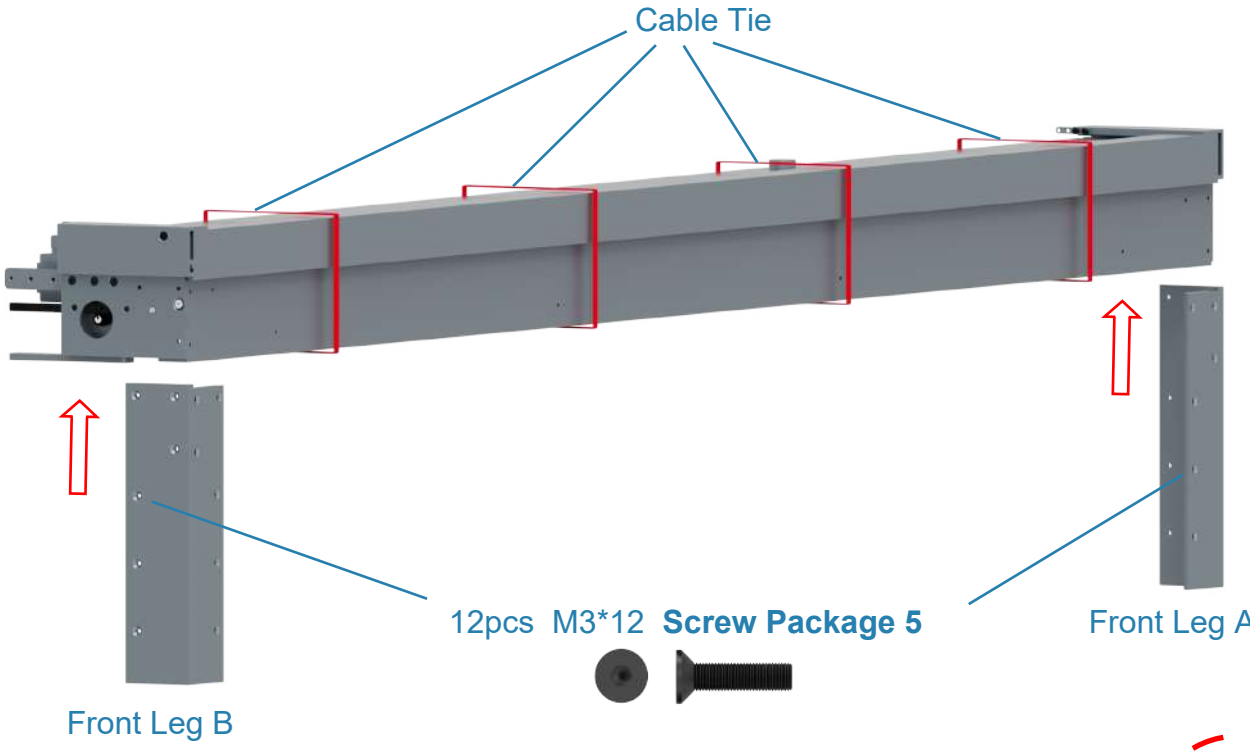

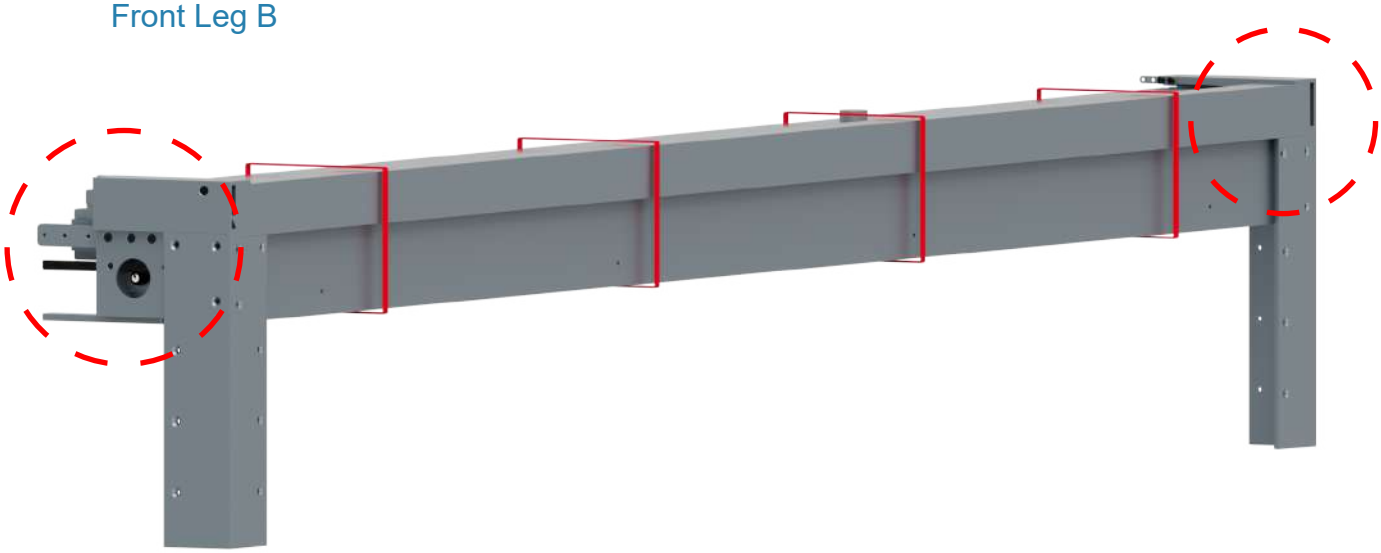

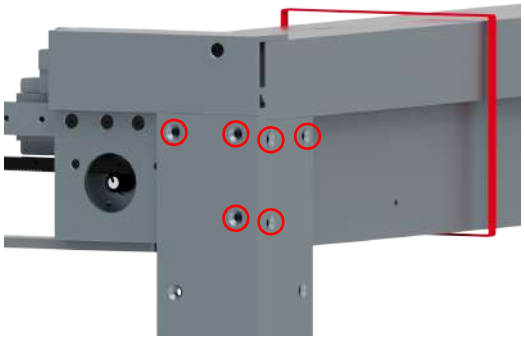

Detail View

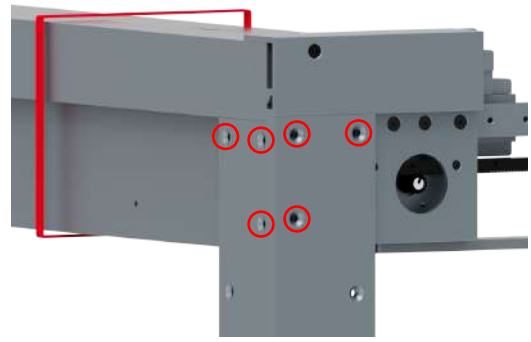

Detail View

2.1.5 Install Front Beam Components（This step's installation is very important, please be sure to refer to the video tutorial - Tyvok S1 Assembly Tips 2, the tutorial link is follows）

https://www.youtube.com/playlist?list=PLSvZgUsDjmtb0CVRCUQvaicy3uJFqPG67

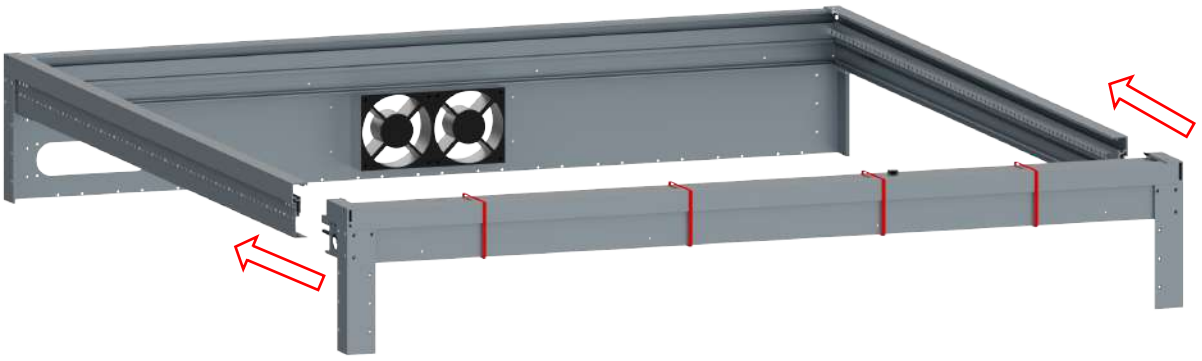

tips The symmetrical and quantity of screws used in symmetrical positions are the same.

2pcs M3*6 **Screw Package 2**

3pcs M3*6 **Screw Package 8**

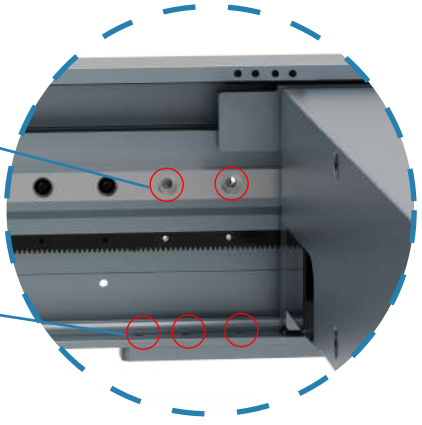

Inside View

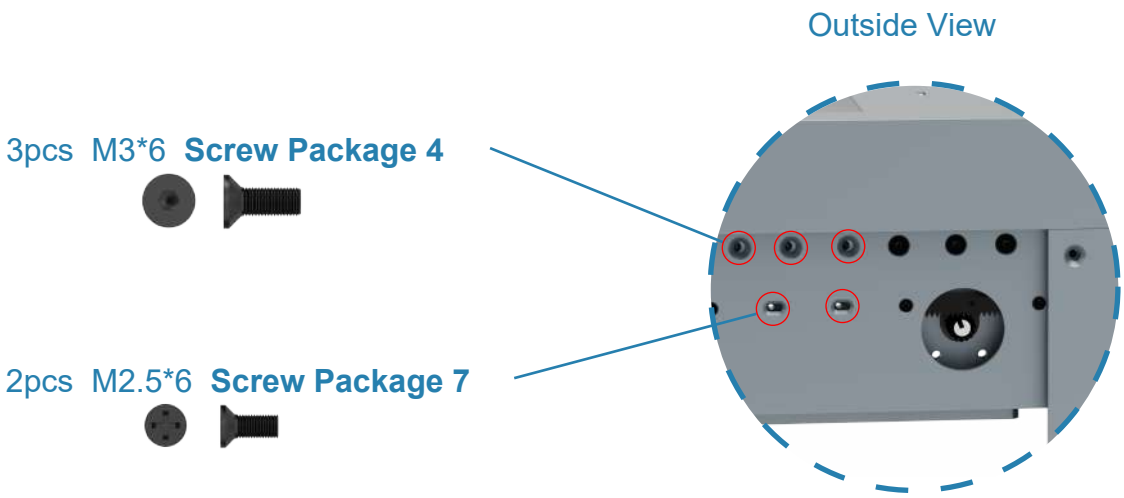

2.2 Side Panels and Accessories Installation

2.2.1 Install Front Beam Slot Plate

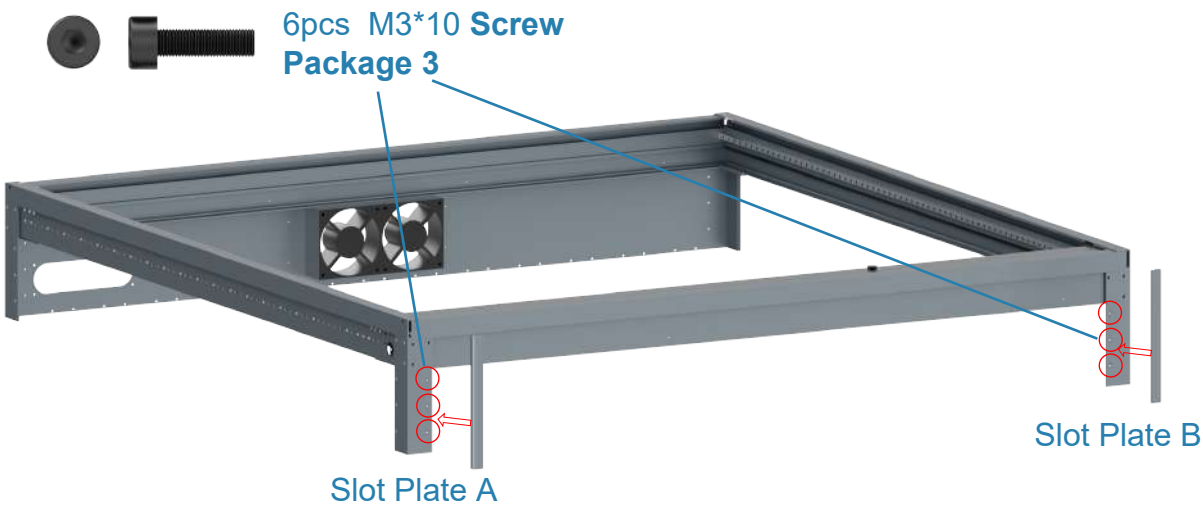

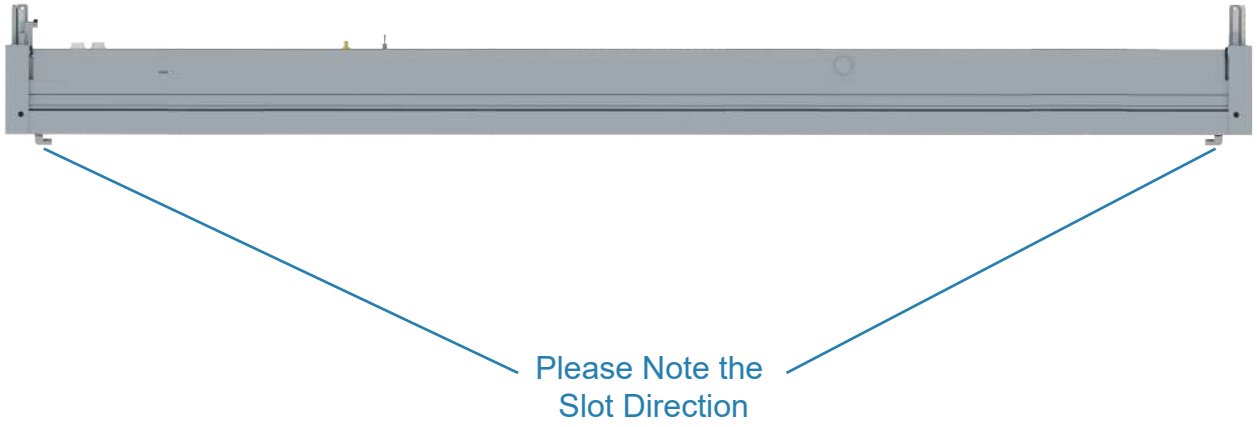

2.2.2 Install Air Exhaust Plate

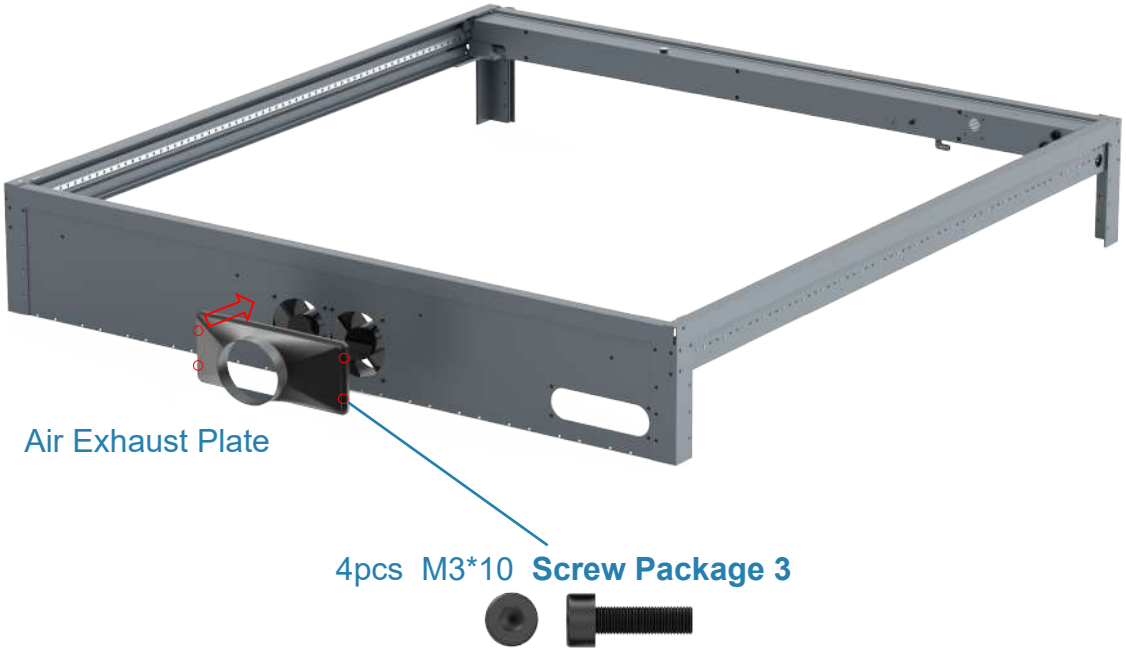

2.2.3 Install Drag-chain

1. Install Control Board

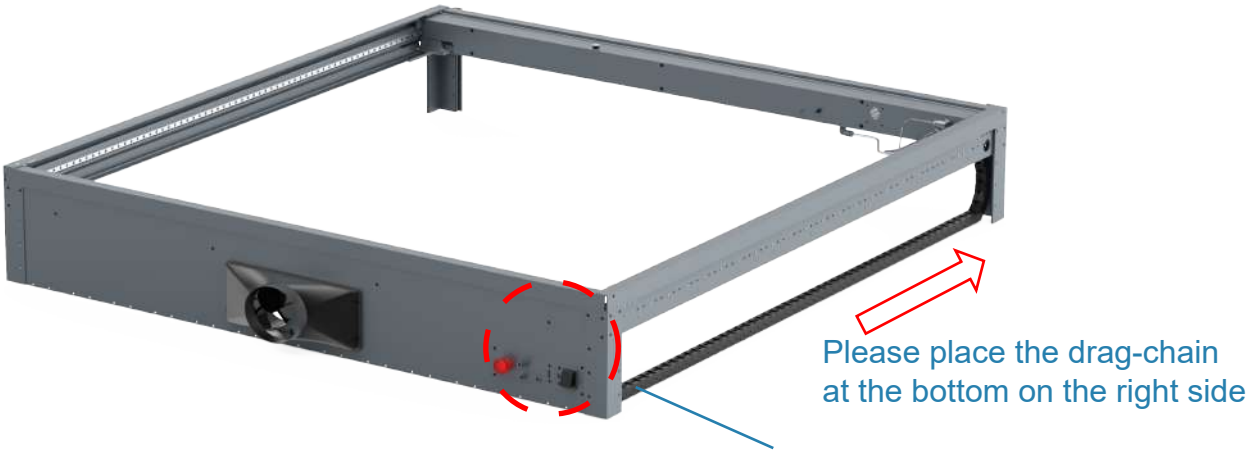

Please remove 52 chains from this end and roll up the excess cable and place it to the right.
（Please refer to the video tutorial - Tyvok S1 Assembly Tips 3, the tutorial link is as follows）
https://www.youtube.com/playlist?list=PLSvZgUsDjmtb0CVRCUQvaicy3uJFqPG67

Detail View

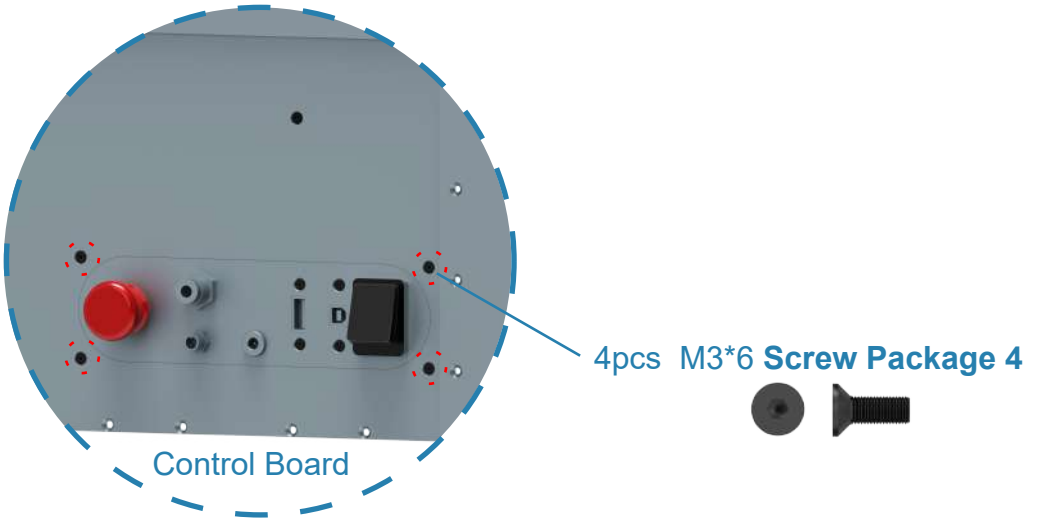

2. Install the end of drag chain

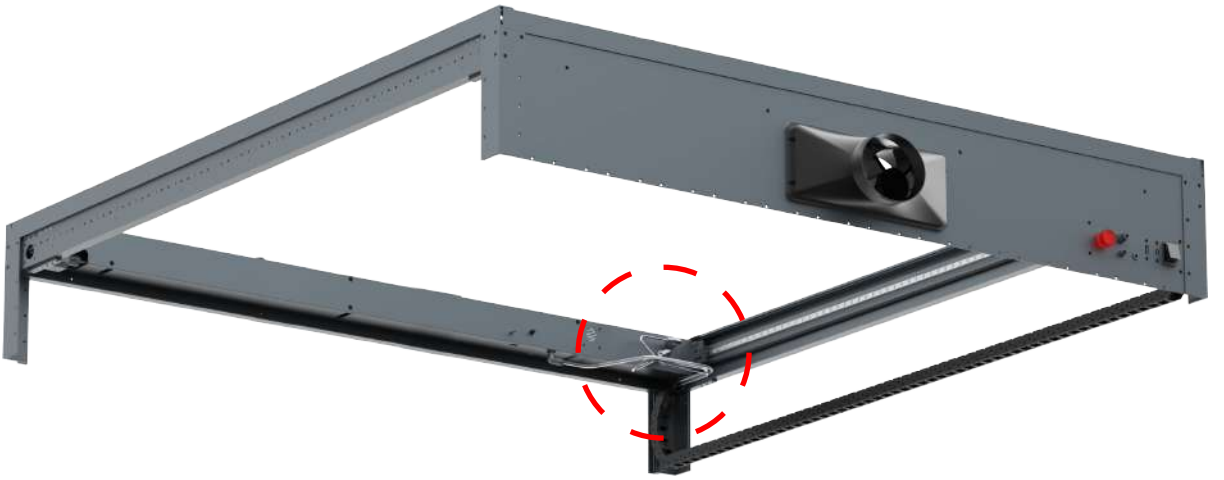

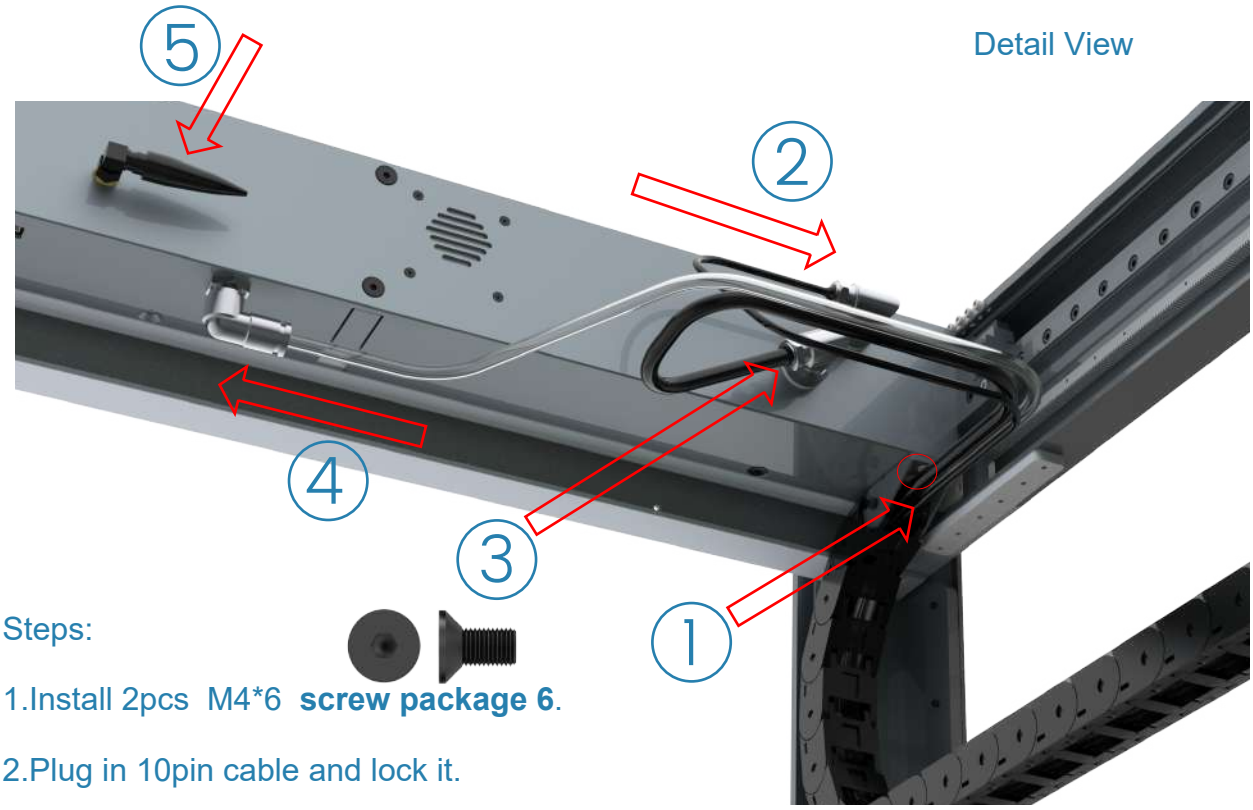

Steps:

1.Install 2pcs M4*6 **screw package 6**.

2.Plug in 10pin cable and lock it.

3.Plug in 3pin cable and lock it.

4.Plug in D6 air pipe.

5.Plug in antenna and lcok it.

2.2.4 Install X-axis Acrylic Board

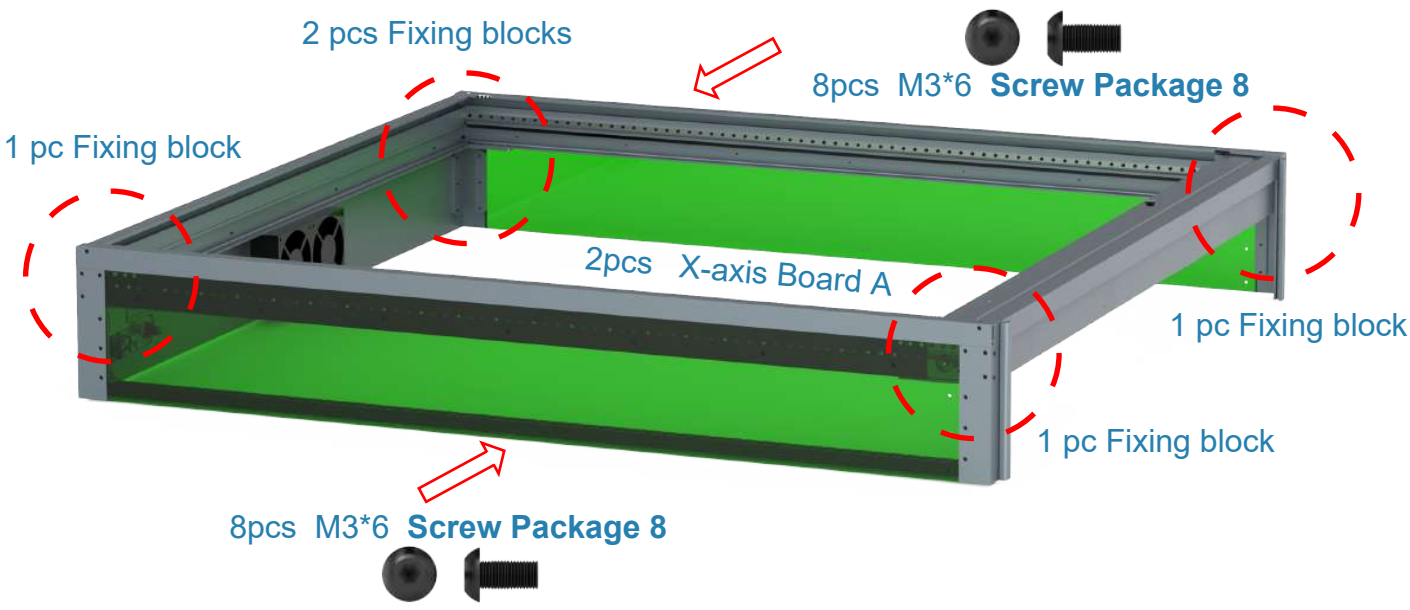

Detail View

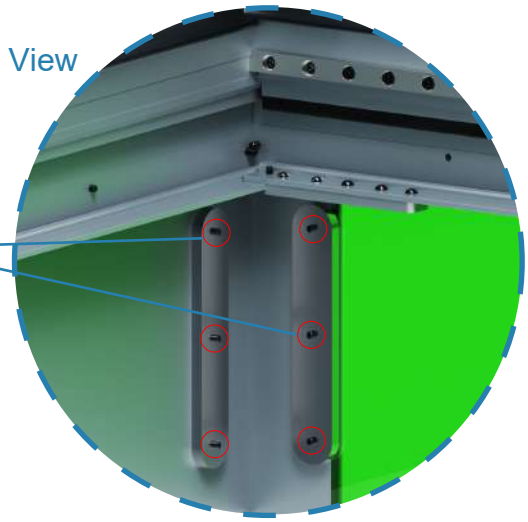

5pcs Fixing Blocks（Install one supporting plate on each of the rest three legs）
15pcs M3*12 **Screw Package 5**

2.2.5 Install the small connection plate

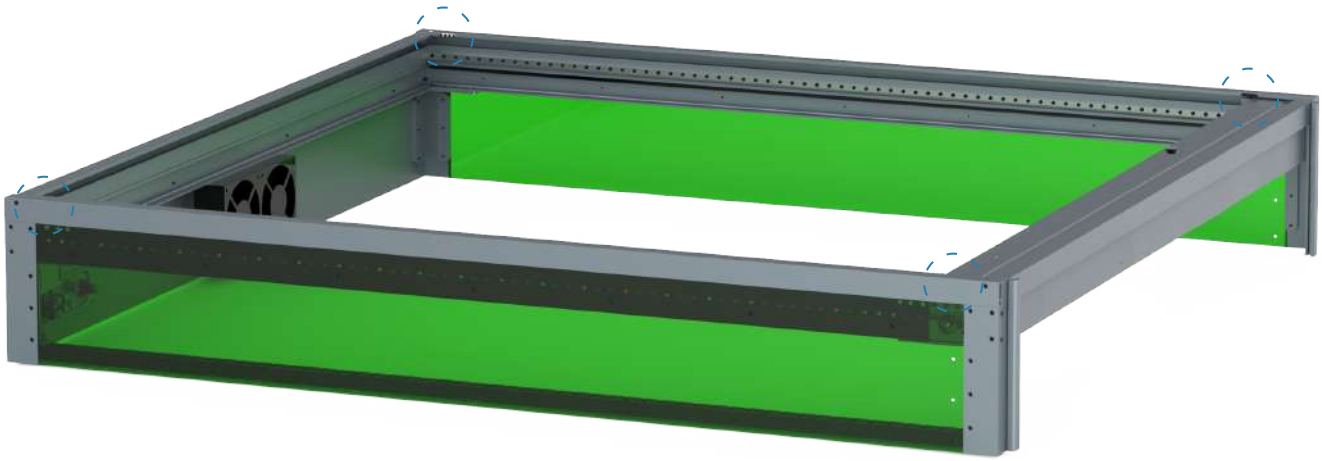

Detail View

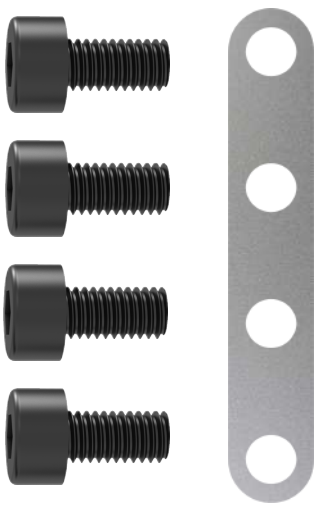

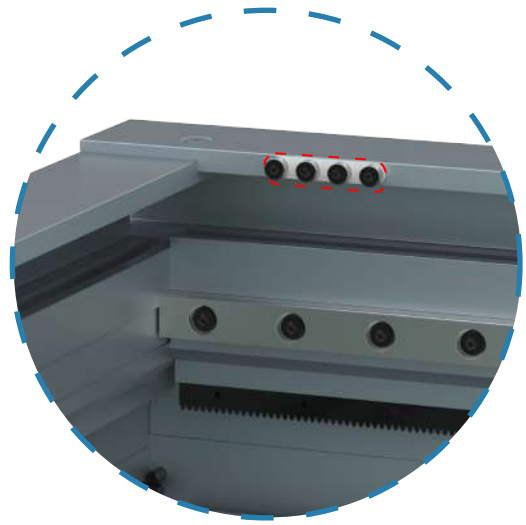

Take out 16PCS M2.5*6 Screws and 4PCS small connecting plates from the **Screw Package 1**
Install at the position in the picture

2.2.6 Install Front Acrylic Board

2.2.7 Install Y -axis and Laser Module

1. Move the Y-axis to the left

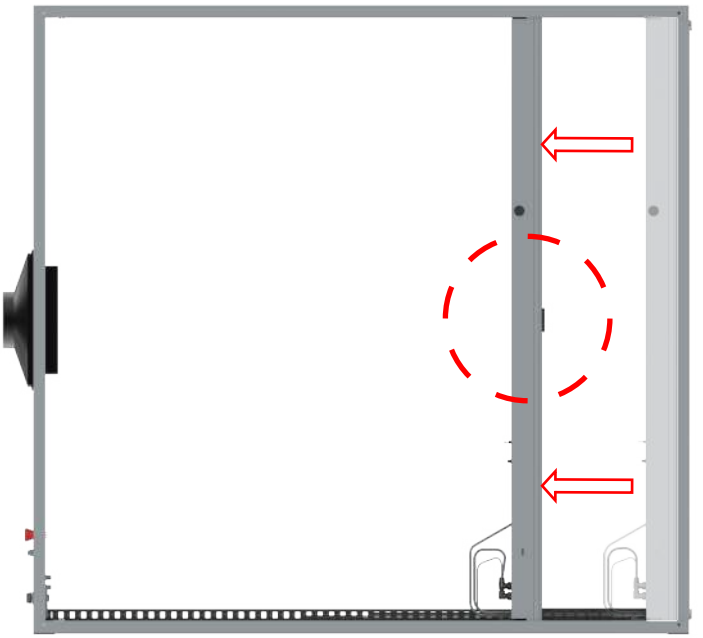

2. Install Laser Module Back Plate

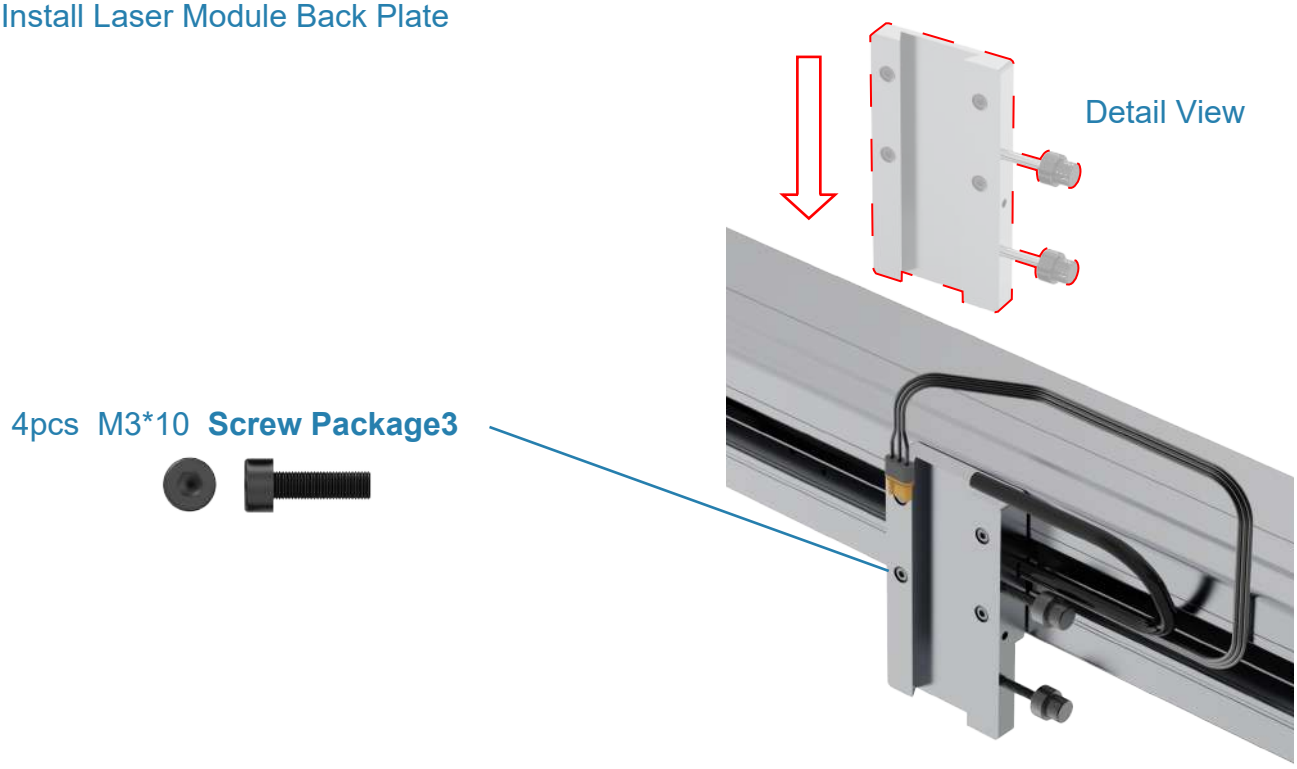

3. Install Laser Module

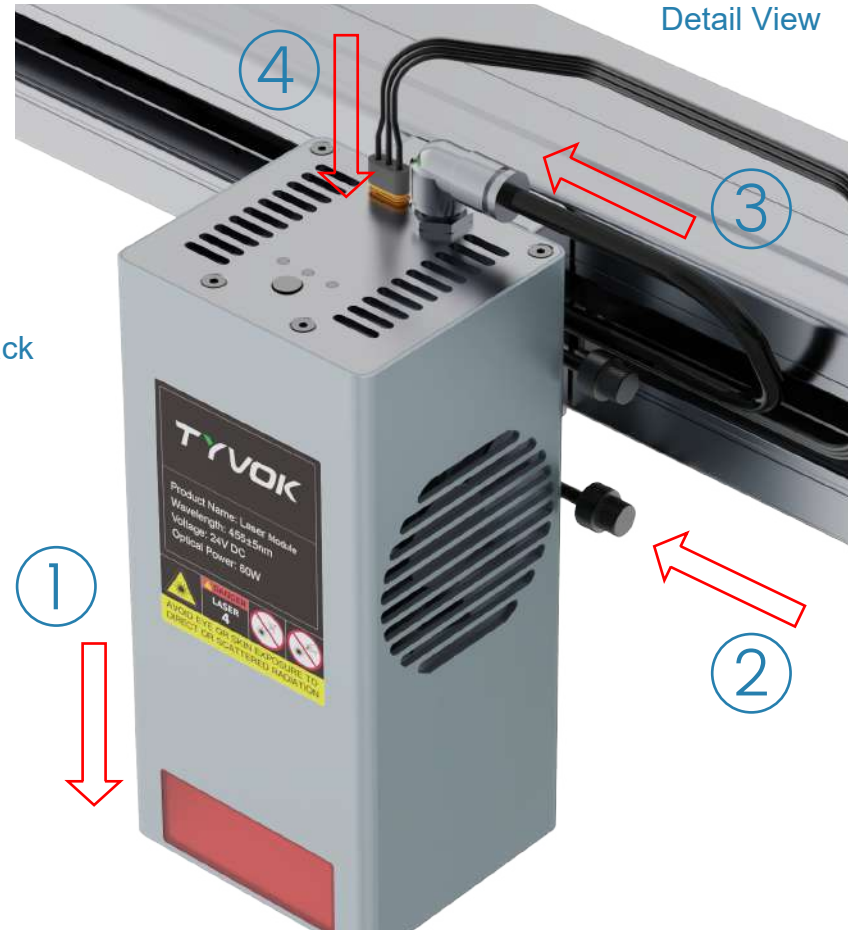

Steps:
1.Insert the laser module to the back plate.
2. Lock the thumb screws.
3. Insert the D6 air pipe.
4. Insert 3pin power cable.

4.CNC Module Installation

Detail View

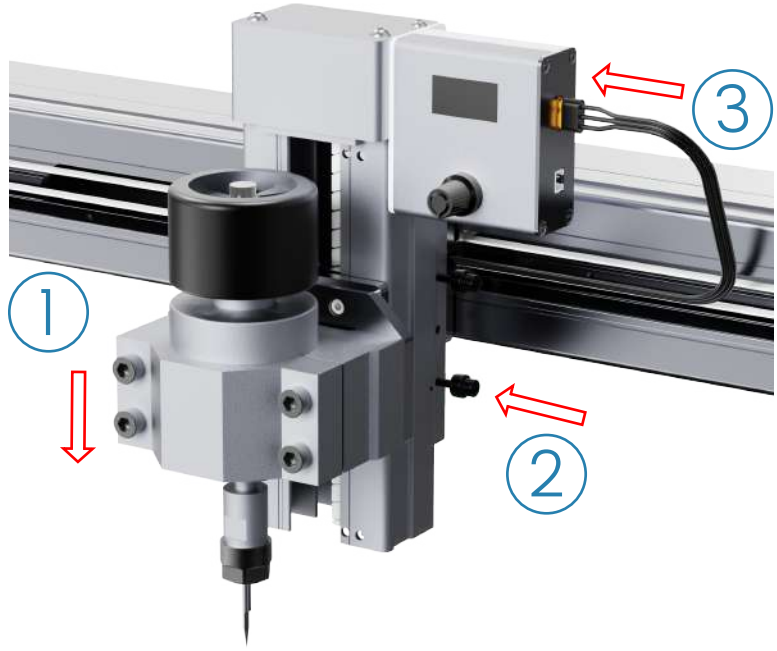

Step:
1.Insert the CNC module to the back plate.
2.Lock the thumb screws.
3.Insert 3pin power cable.

2.2.8 Install Cover Components

1. Unfold the cover beam.

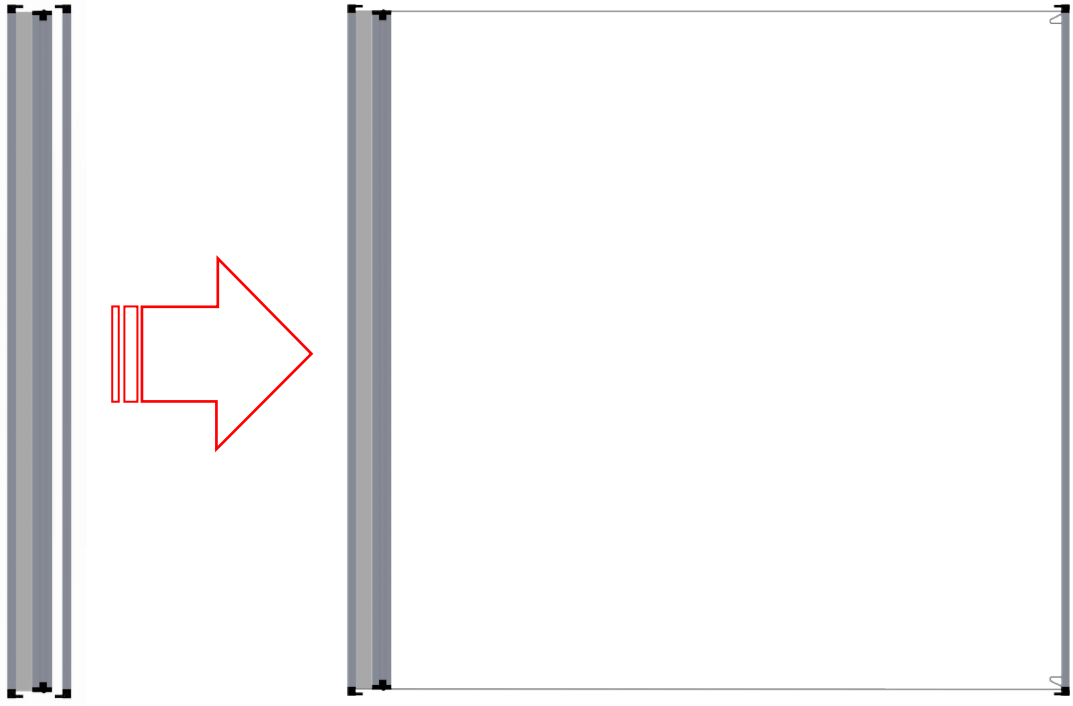

2. Assemble the cover frame

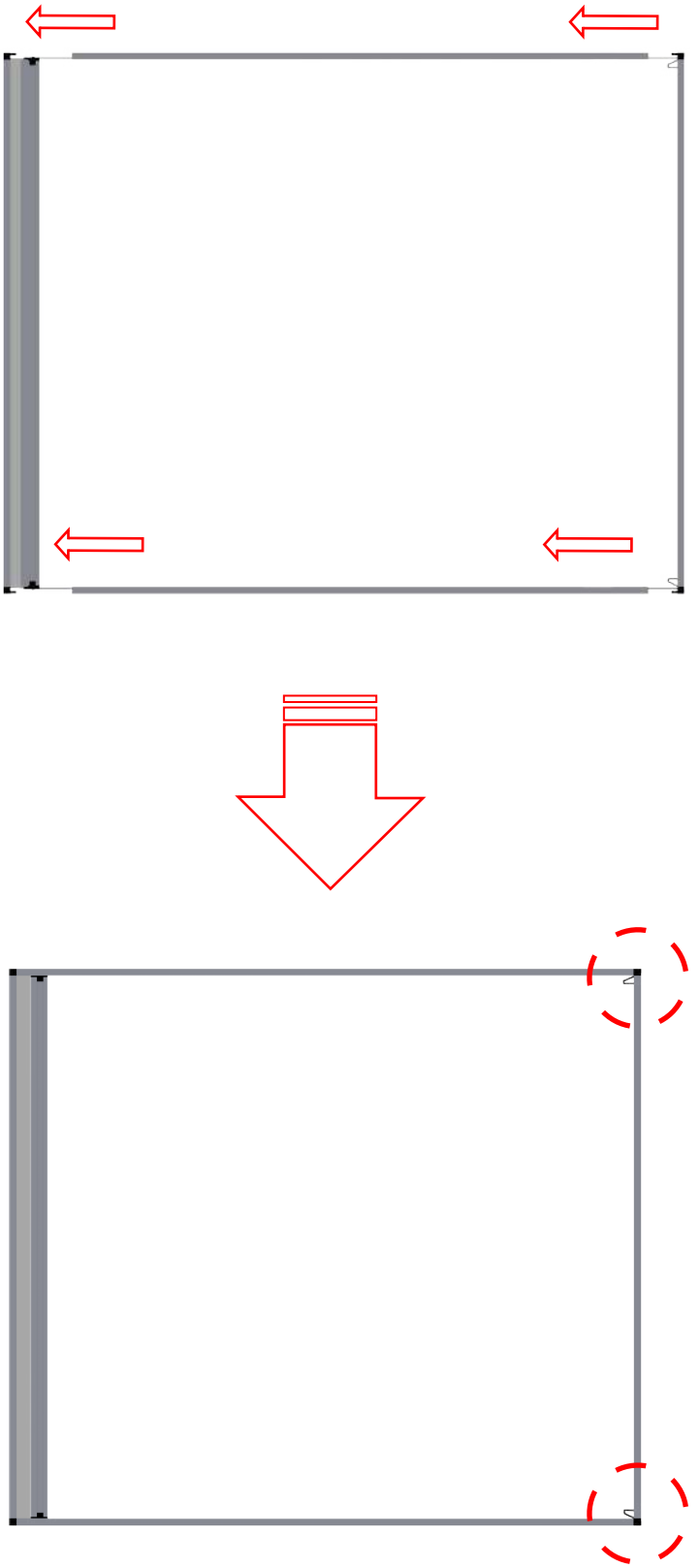

Move the slider to make rope tighten, then tighten the screw to fix it.

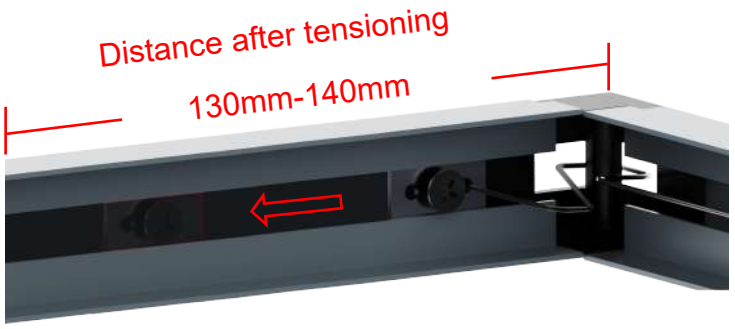

Detail View

3. Apply double-sided tape(4PCS*400mm)

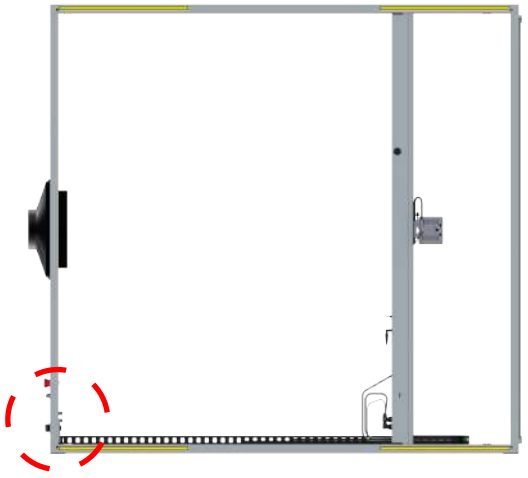

Cut 4PCS of double-sided tape 400mm in length and
paste it at the position shown in the picture
（The location shown is for reference only）

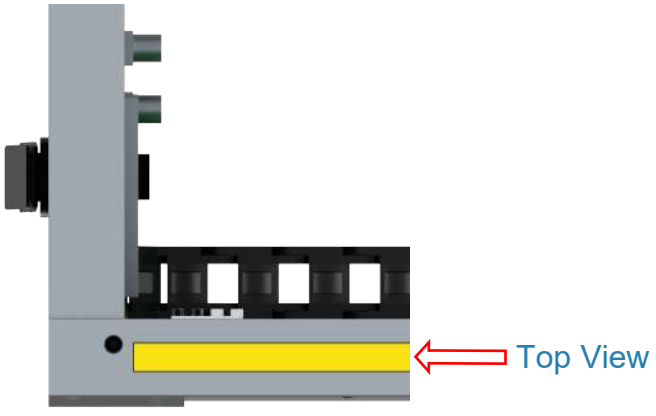

4. Install the Cover

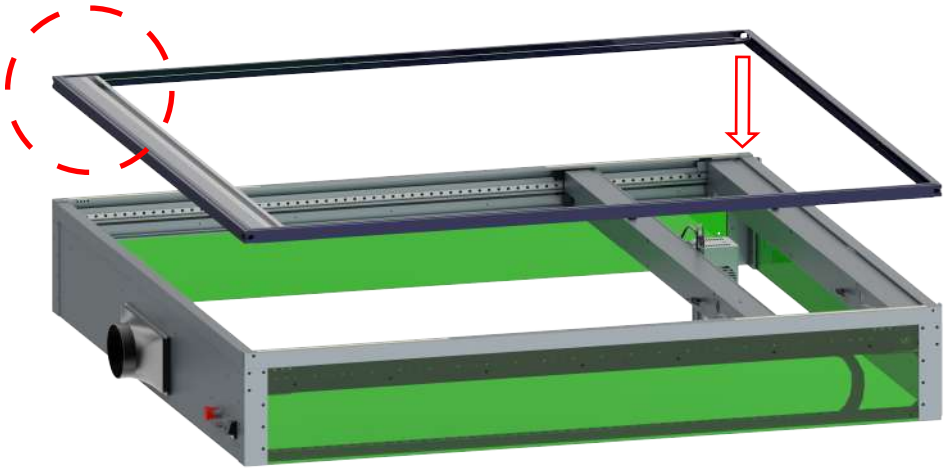

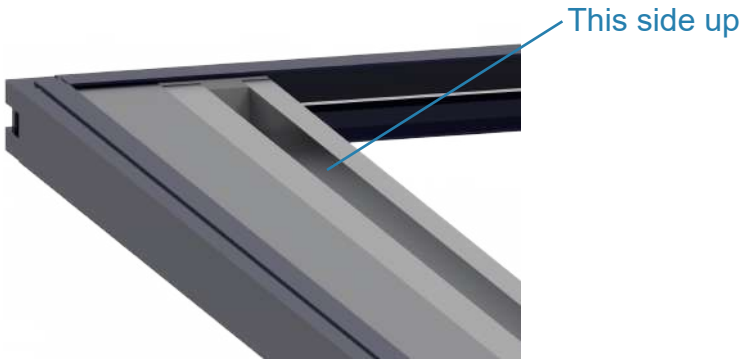

Detail View

2.2.9 Install Mini Fire Extinguisher

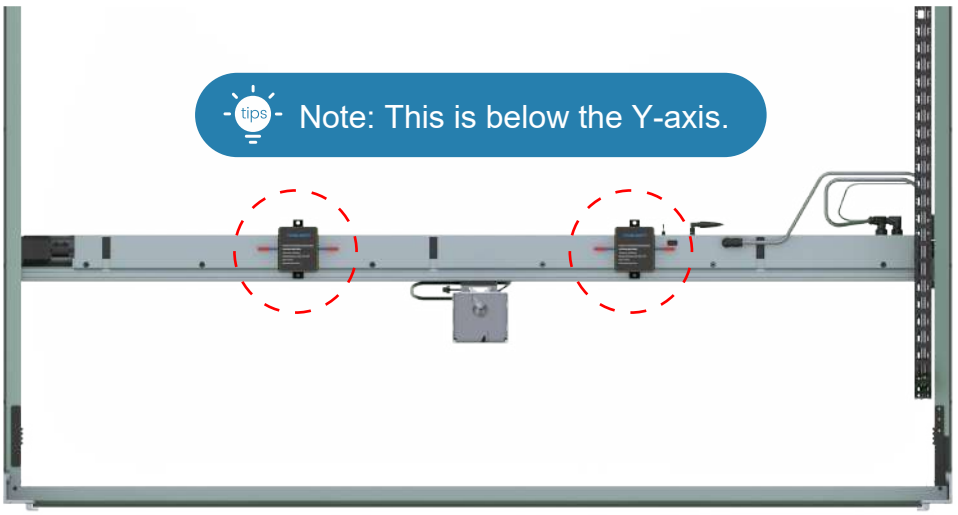

Peel off the double-sided adhesive sticker and then stick the Mini Fire Extinguisher on the position shown in the above picture.

Installation completed, as shown below

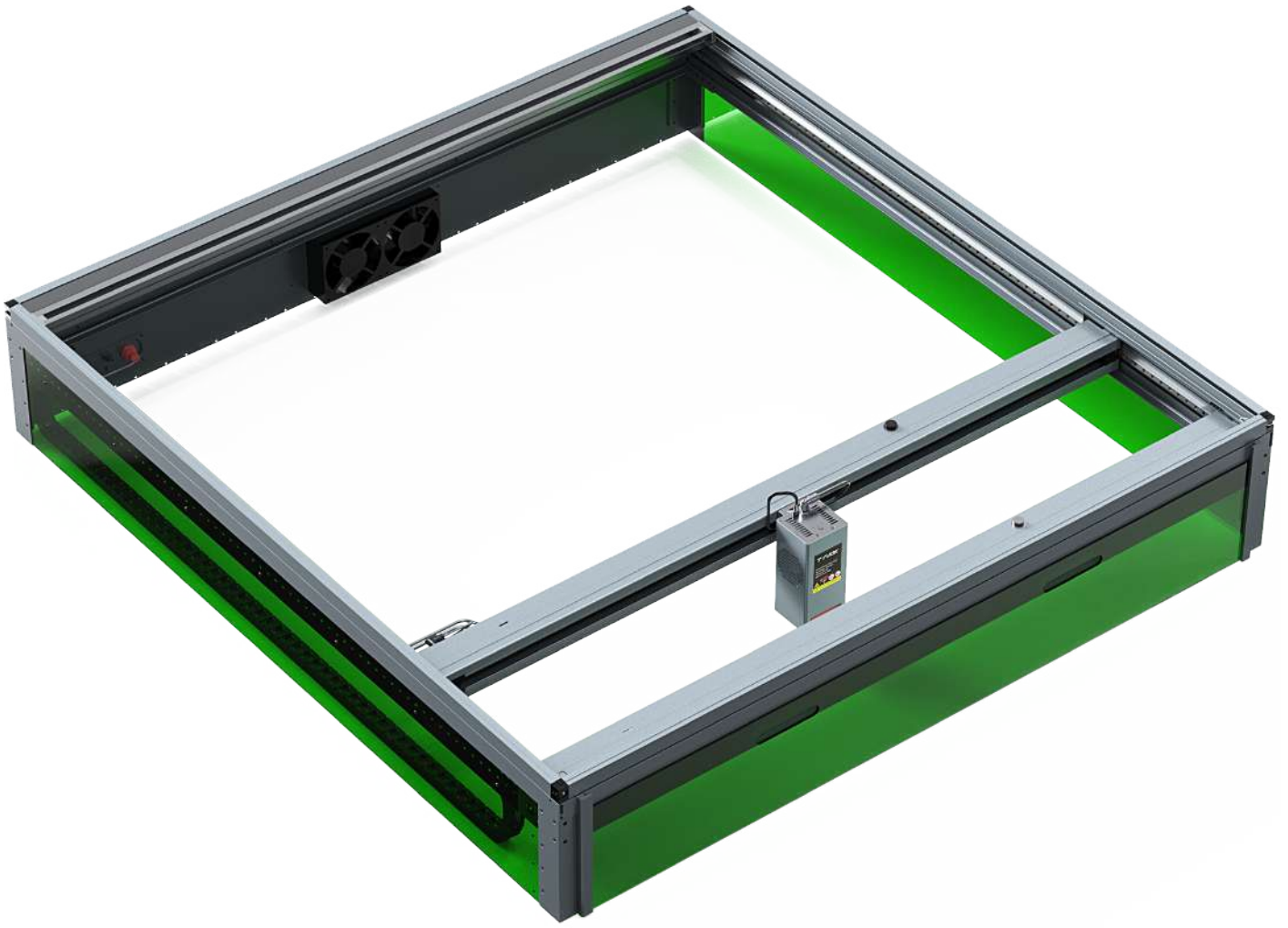

03

HOW TO USE SPIDER S1

3.1 Adjust the Focus of the Laser Head

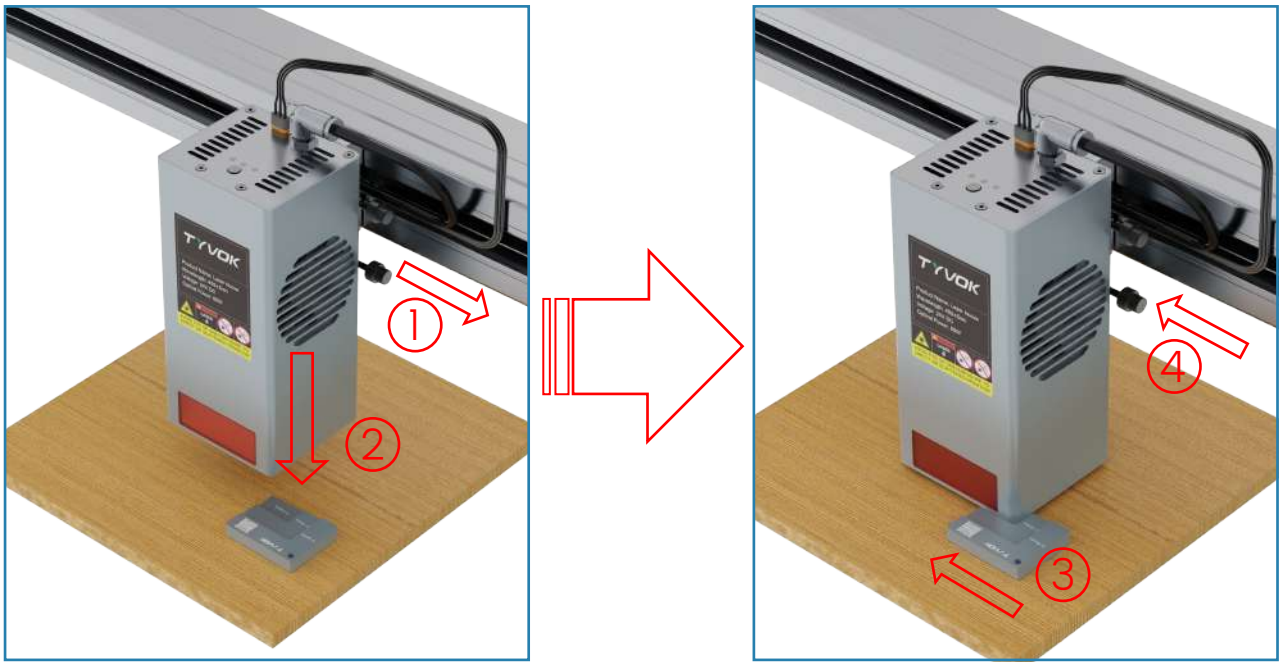

Steps:

1. Loosen the two thumb screws.
2. Lower the laser head onto the focusing block.
3. As shown in the right figure, select the appropriate step according to the thickness of the material.
4. Tighten the two thumb screws and remove the focusing block. The focus adjustment is complete.

Laser Focus Block

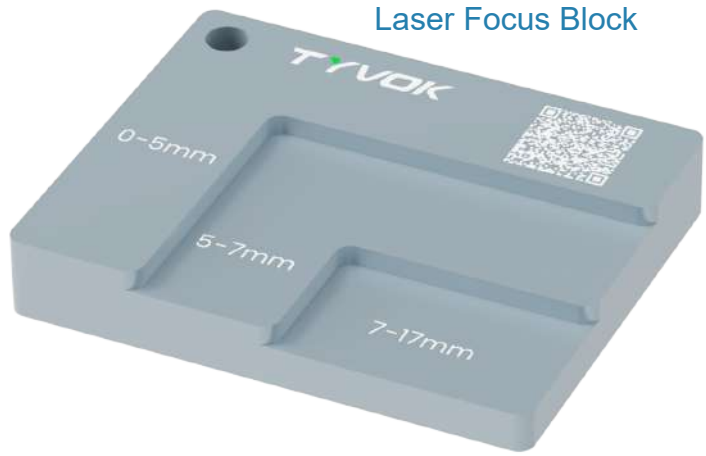

tips If you change to materials of different thicknesses, please reconfirm whether the focus is appropriate.

3.2 Spider S1 Wi-Fi Connection

1. Turn on Spider S1, wait for the device to return to the x-axis origin, then click on “Setting” to enter the setup interface.

2. Click on "Wifi" to enter the WiFi interface, then select the known WiFi network.

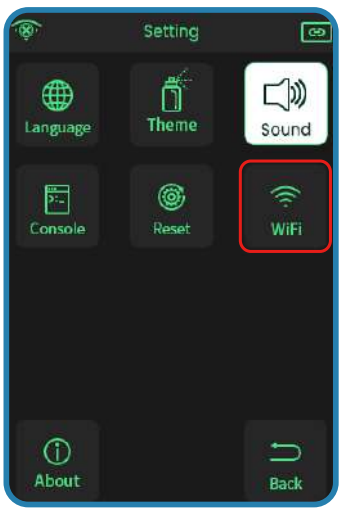

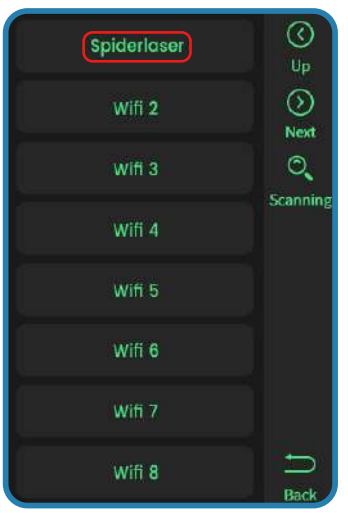

3. Enter the WiFi Password to establish a connection. Connection successful. Obtain Spider S1 device IP.

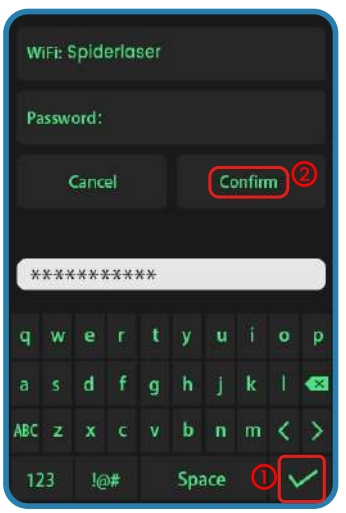

4. Once the device is connected to the "Local Area Network" (LAN), you can proceed with wireless operation. Please ensure that your wireless device is also connected to the same LAN (applicable to 2.4G frequency network only).

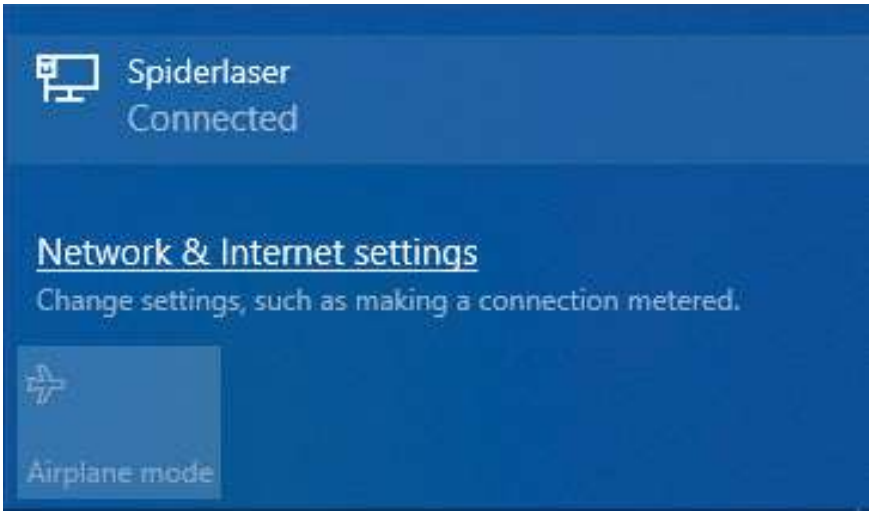

tips - The device only supports a 2.4G frequency network.

3.3 Spider S1 Operation

3.3.1 PC Web Wireless Terminal Operation

Step 1: Make sure that the PC and the host device are on the same local area network and obtain the IP address of Spider S1. Enter the IP address into the browser's address bar on the PC, then click “Enter” to enter the web page.

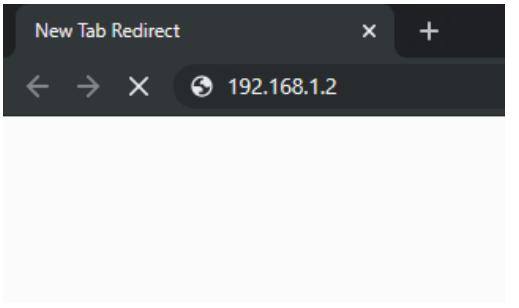

Step 2: Enter the operation page of Spider S1 web terminal. Make preparations before starting on the “Control” page, that is, move the position of laser head and set the origin.

After entering the operation page, adjust the moving distance in the "Distance" column (recommended 10mm-20mm).

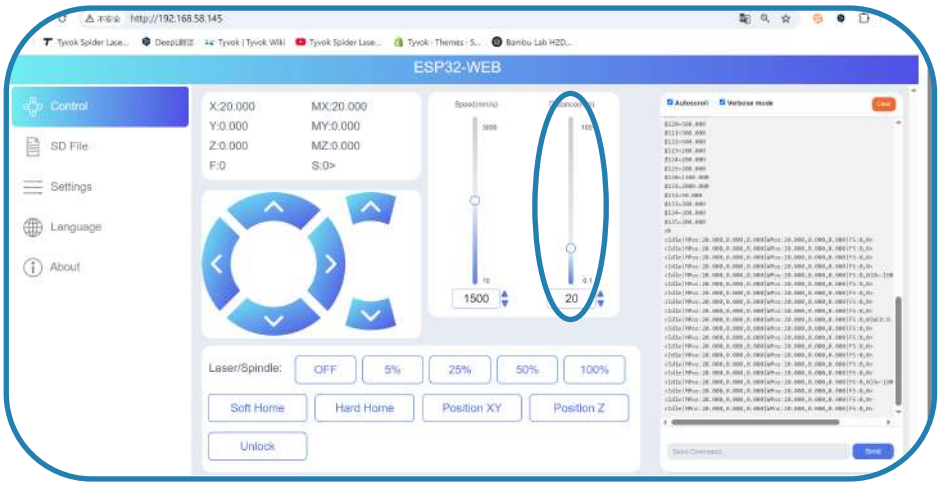

The correspondence between the control buttons and the direction of movement of the machine is shown below.

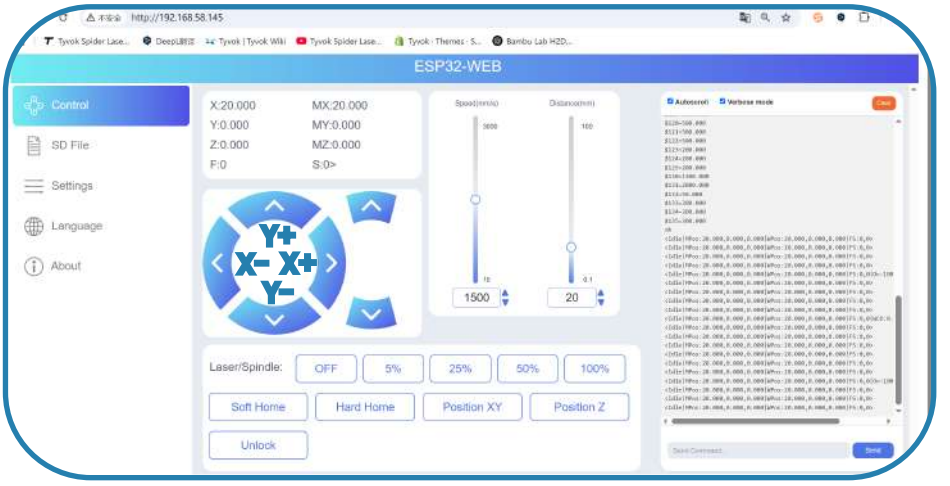

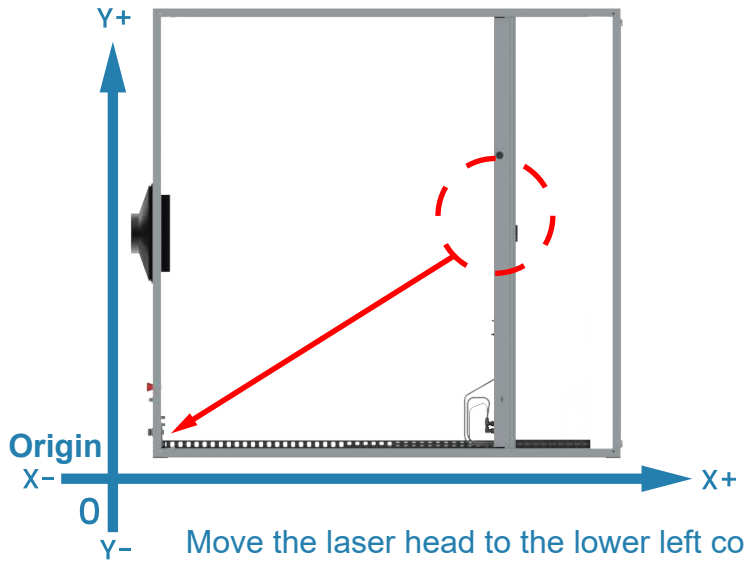

Move the laser head to the lower left corner and click on “Position XY” to set the origin.

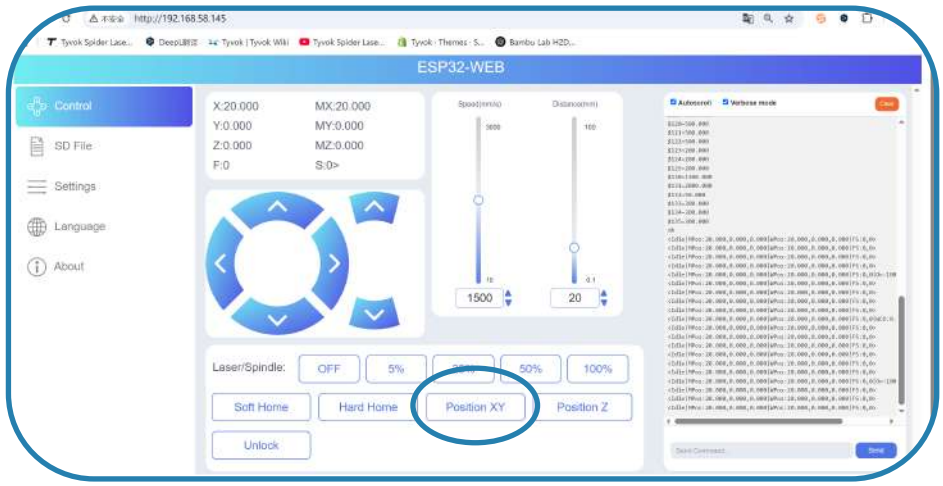

Set the working origin to the lower left corner in various design software to make it consistent with the setting of Spider S1.

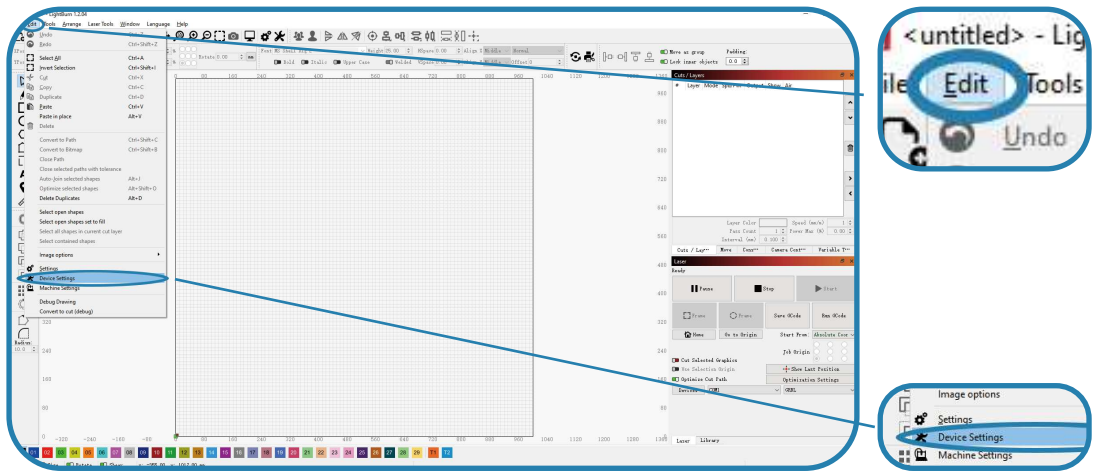

LightBurn

1. In "Basic Settings", select "Origin" in the lower left corner and click "OK".

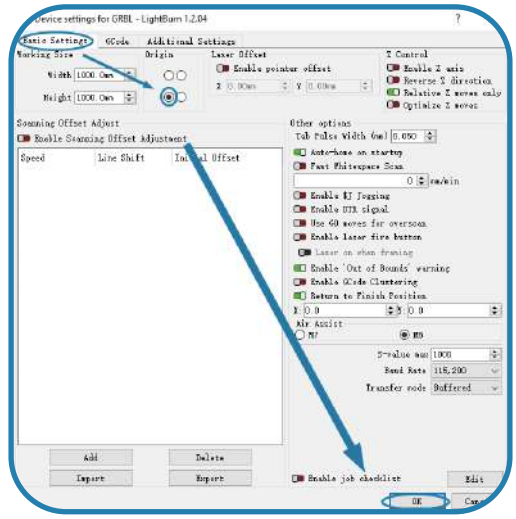

2. In the "Laser" module at the bottom right, change "Start From" to "Absolute Coords". Preparations are complete.

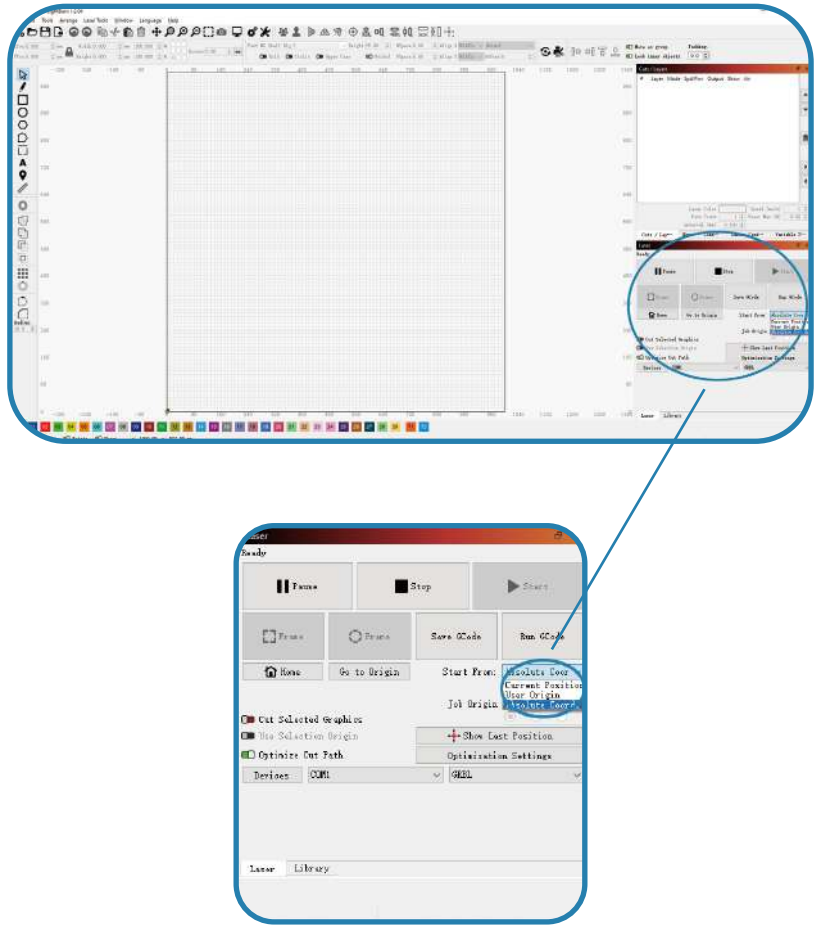

3. Click "SD File", select the working file and upload it to the web-side system.

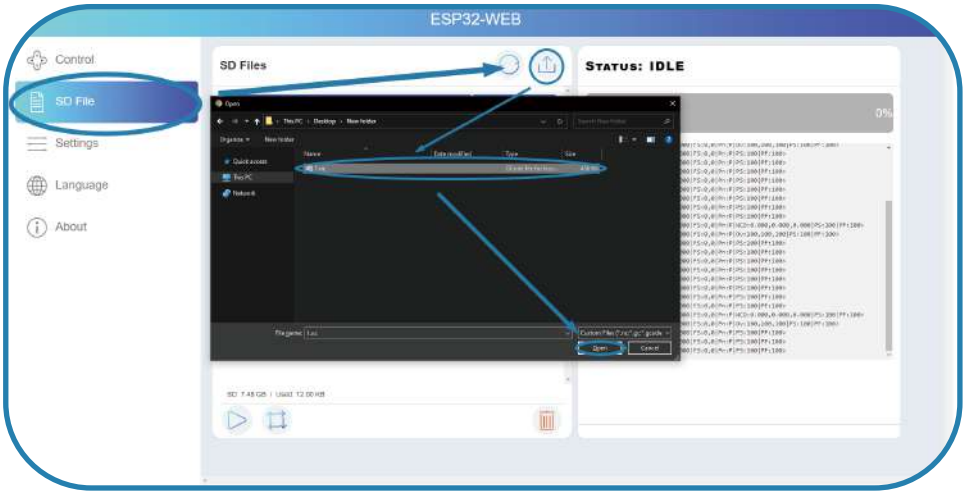

4. Select the file, preview the working area and start working after confirmation.

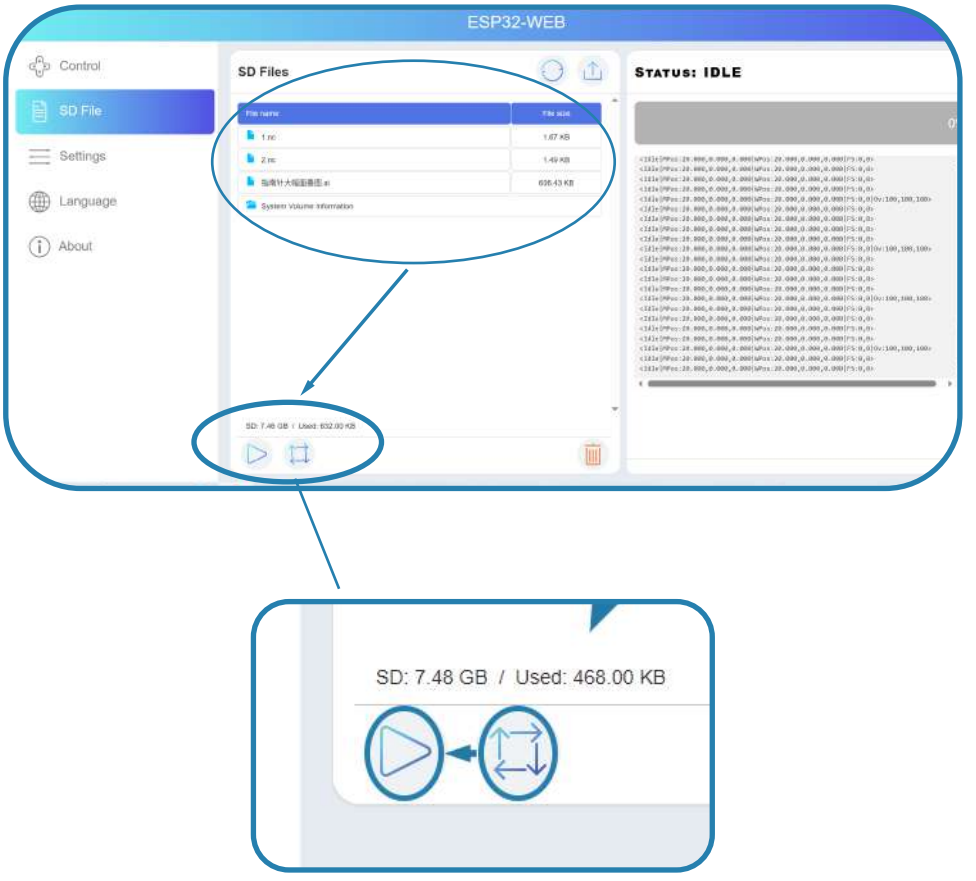

3.3.2 TF Card Operation

1. Click "File" on the screen to enter the design file selection interface. After selecting the design file, enter the operation interface.

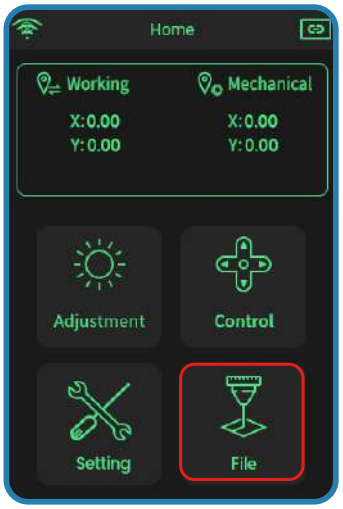

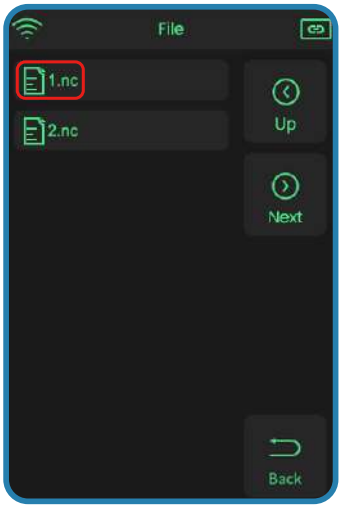

2. Enter the following interface to operate the machine and move it to the origin on the X&Y axis. Click "Position" to complete the origin positioning setting.

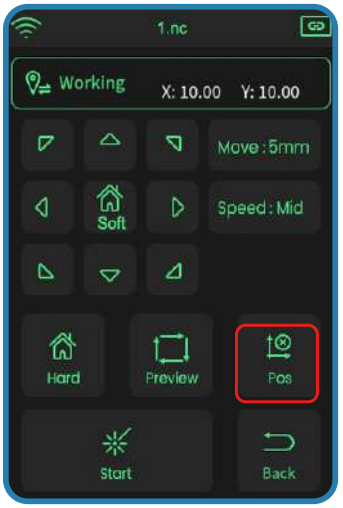

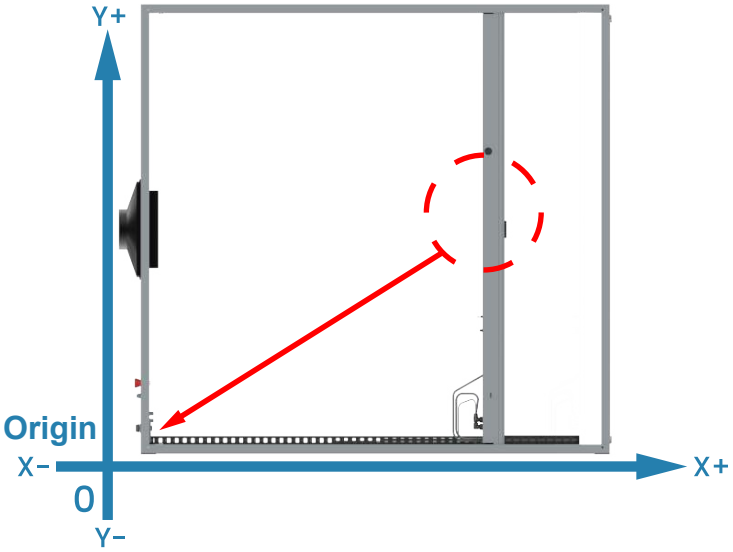

3. Please preview the working area of the laser before starting work each time. Click "Preview" to preview the engraving area of the laser to ensure that the engraving position is accurate.

tips

If you confirm that you do not need to preview, you can directly click "Engraving" to enter the confirmation page directly, and click "√" to start working.

4. Machine starts to work. If an accident occurs during the work, you can directly click "Pause". After clicking "Pause", you can click "Run" to continue working. After clicking "Stop", confirm whether to end the current work. When the work stops, the work can only be started from the beginning. When the work stops, the work should be restart again.

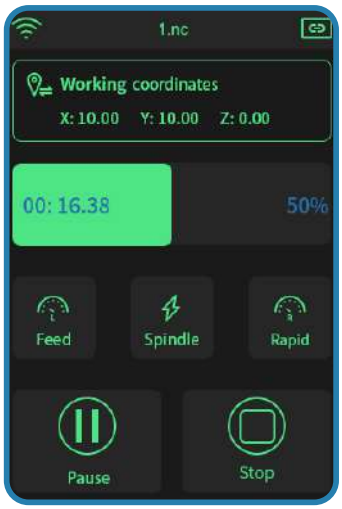

3.3.3 Type-B Real-time Work

1. Install the CH341 driver on the PC.
The Machine's TF card contains the installation program for the CH341 driver. Follow the steps below:

Step 1: Connect the TF card to the computer via a card reader and copy the program named "CH341SER.EXE" to the computer.

Step 2: Power on Spider S1 and connect it to the computer using a USB cable. Double-click to open the "CH341SER.EXE" program.

Step 3: Click "Install" and wait for a moment until a pop-up appears, indicating " Driver installation successful."

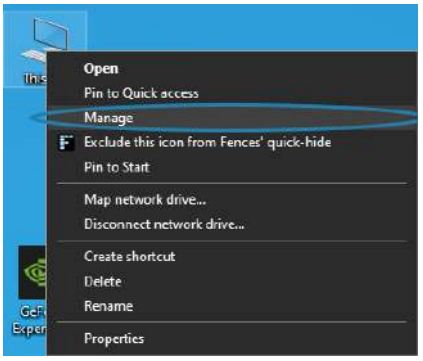

Right-click on "This PC" and select "Manage," which will bring up the Computer Management window.

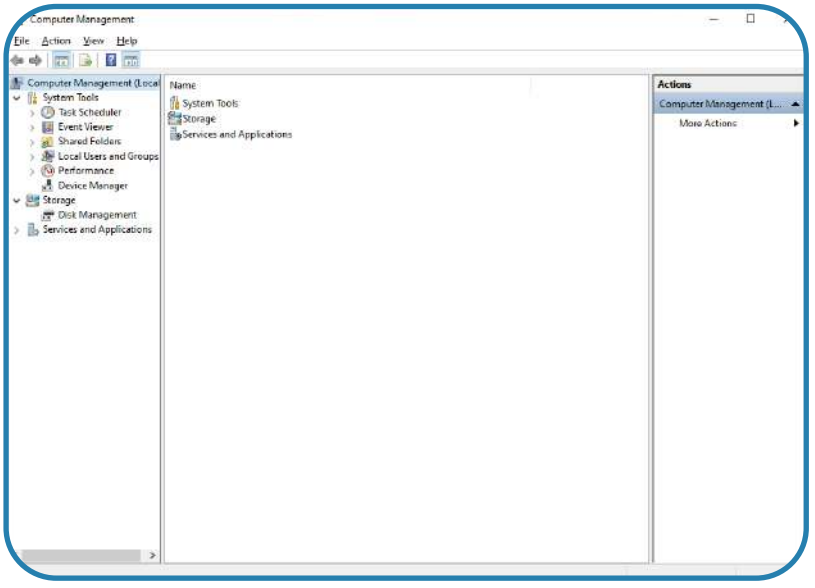

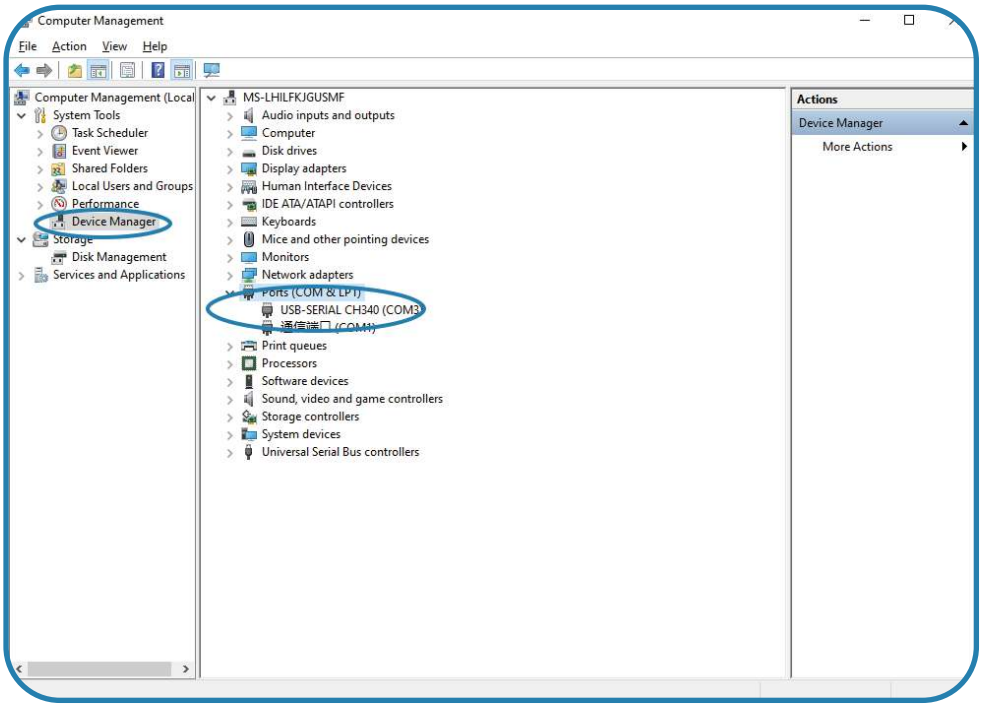

Select "Device Manager", and "USB-SERIAL CH340" appears under the "Port" column, which means the installation is successful.

After connecting the Spider S1 to the computer with the USB cable, you can use the PC software “Light Burn” and “LaserGRBL” laser engraving software to operate.

3.3.4 Mobile APP Wireless Operation

Search for "MKSLaser" through the mobile application store, download the APP, and make sure that the mobile phone and Spider S1 are in the same local area network. After the Spider S1 is connected to the Internet, click the icon in the upper left corner of the mobile APP, enter the IP of the Spider S1 device, and click Connect.

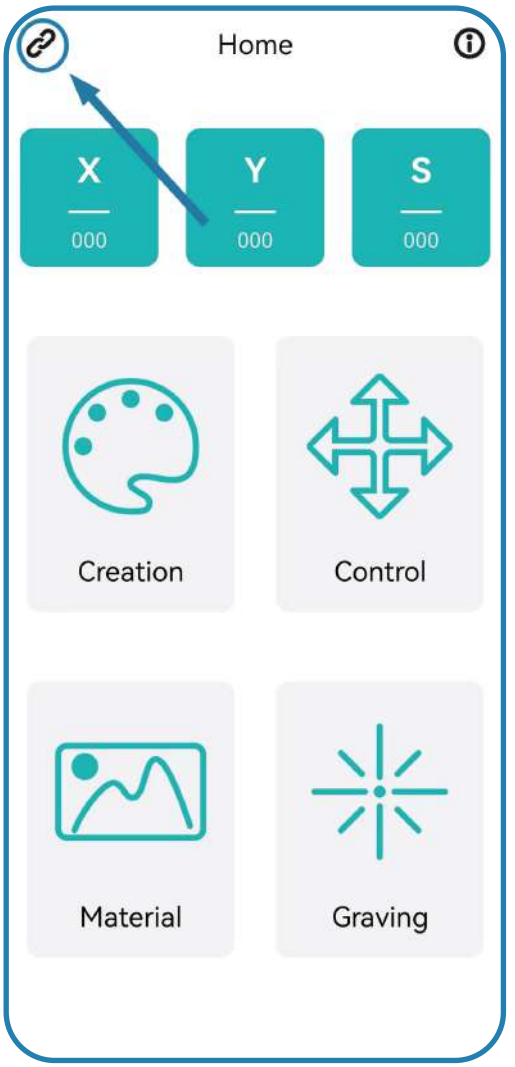

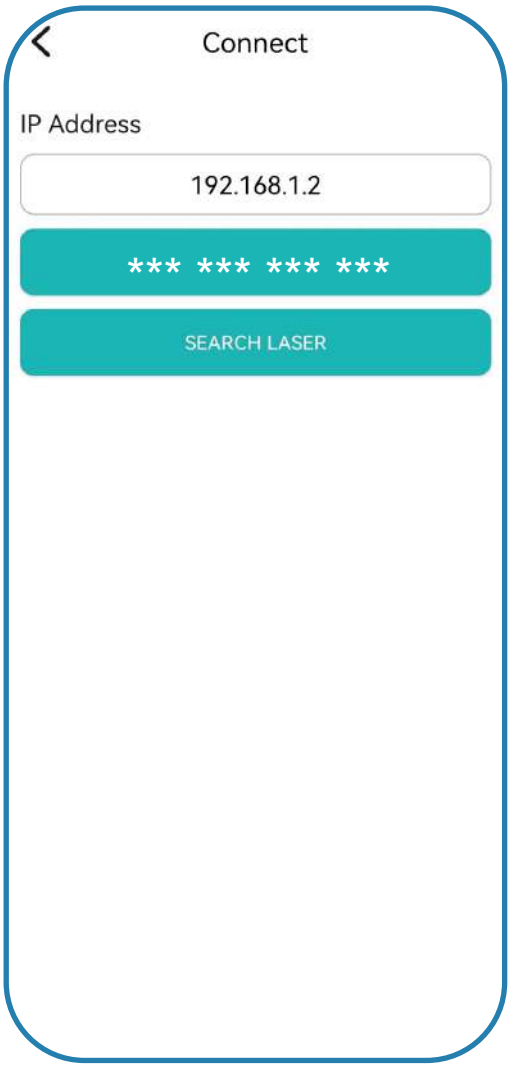

PARAMETERS

Model

Tyvok S1

Machine size

4ft*4ft(1200mm*1220mm)

Net weight

About 45KG

Operation system

Windows / Mac OS

Input

100-240V ~ 50-60Hz

Output

DC 24V 10A

Machine Power

240W

Laser wave length

455±5nm

Laser power

20W/40W/60W

Safety class

CLASS I (FDA classification standard)

Laser engraving software

LaserGRBL, LightBurn

Format files

jpeg,png,bmp,svg,dxf

Type of supporting materials

Cardboard, wood, bamboo, rubber, leather, fabric, acrylic, painted metal, plastic, etc.

WARRANTY

Before returning the product and filling in a warranty, please contact after-sale person for going through after-sale formality. And attach this warranty card along with the returned machine.

Repair ☐ **Change** ☐ **Return** ☐

Name:_____ **Telephone:**_____

Address:_____

Serial Number:_____ **Order Number:**_____

Channel:_____ **Date of Purchase Day:**_____

Manufacture Problem Description and Return Reasons/Suggestions:_____

Repair Records:_____

Note: Client needs to fill in basic info. and return reasons. Repair records shall be retained for technicians.

※ Users should abide by the laws and regulations of the country and region where the equipment is located (place of use), abide by professional ethics, and pay attention to safety obligations. It is strictly forbidden to use our products or equipment for any illegal purpose. Our company is not responsible for the relevant legal responsibilities that the violator should bear.

Since each model is different, the actual product may be different from the picture. Please refer to the actual product.

The final interpretation right belongs to Shenzhen Tyvok Technology Co., ltd.